LISTA DE APLICACIONES - BUYERS GUIDE

RB2410

8 424073 204547

Qty: 300 Weight: 1.160

O.E.M.	MAKE
5QS 698 451	VW
5WA 698 451 A	CUPRA
5WA 698 451 F	CUPRA
5WA 698 451 J	VW
5WA 6984 51 C	CUPRA
8Y0 698 451 C	CUPRA

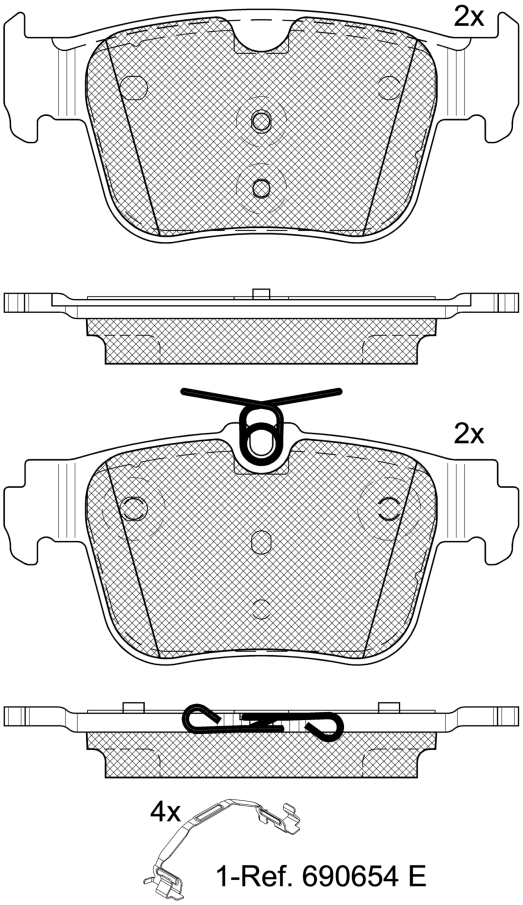

RB2410

E 9 90R-02A0111/5562

Ate - Teves

122.9x55.8x16
122.9x57.8x16

WVA	FMSI
26206	D2433-9660
26207	

Sin Filas

		Trac.	CC	Kw	CV		Front / Rear
AUDI							
A3 IV (8YS, 8YM) 03.20-							**Sedán (Compact executive car-D Segment)**
30 TFSI (DLAA)	Gasolina	FWD	999	81	110	06.20-	*
35 TFSI (DPCA)	Gasolina	FWD	1498	110	150	04.20-	*
40 TFSI (CZPB,DNNA)	Gasolina	FWD	1984	140	190	05.21-	*
40 TFSI quattro	Gasolina	4WD	1984	140	190	07.21-	*
S3 quattro (DNFB)	Gasolina	4WD	1984	228	310	06.20-	*
S3 quattro	Gasolina	4WD	1984	245	333	02.24-	*
RS3 quattro	Gasolina	4WD	2480	294	400	07.21-	*
RS3 quattro	Gasolina	4WD	2480	299	407	01.22-	*
30 TFSI Mild Hybrid	Gasol./eléc.	FWD	999	81	110	06.20-	*
30 TFSI Mild Hybrid	Gasol./eléc.	FWD	999	81	110	06.20-	*
35 TFSI Mild Hybrid (DFYA)	Gasol./eléc.	FWD	1498	110	150	04.20-	*
30 TDI (DSUD)	Diesel	FWD	1968	85	116	06.20-	*
35 TDI (DSRB)	Diesel	FWD	1968	110	150	04.20-	*
40 TDI quattro	Diesel	4WD	1968	147	200	12.20-	*
A3 IV Sportback (8YA, 8YF) 11.19-							**[CAMBIADO]:Fastback (Compact executive car-D Segment)**
30 TFSI (DLAA)	Gasolina	FWD	999	81	110	06.20-	*
35 TFSI (DPCA)	Gasolina	FWD	1498	110	150	11.19-	*
2.0 40 TFSI (CZPB,DNNA)	Gasolina	FWD	1984	140	190	05.21-	*
40 TFSI quattro	Gasolina	4WD	1984	140	190	07.21-	*
S3 quattro (DNFB)	Gasolina	4WD	1984	228	310	06.20-	*
S3 quattro	Gasolina	4WD	1984	245	333	02.24-	*

RS3 quattro	Gasolina	4WD	2480	294	400	07.21-	*
RS3 quattro	Gasolina	4WD	2480	299	407	11.22-	*
30 g-tron (DHFA)	Gasol./Gas (CNG)	FWD	1498	96	131	07.20-	*
30 TFSI Mild Hybrid (DLAA)	Gasol./elec.	FWD	999	81	110	06.20-	*
40 TFSIe (DGEA)	Gasol./elec.	FWD	1395	150	204	06.20-	*
45 TFSIe	Gasol./elec.	FWD	1395	180	245	07.21-	*
35 TFSI Mild Hybrid (DFYA)	Gasol./elec.	FWD	1498	110	150	04.20-	*
40 TFSIe	Gasol./elec.	FWD	1498	150	204	06.24-	*
45 TFSIe	Gasol./elec.	FWD	1498	200	272	11.24-	*
30 TDI (DSUD)	Diesel	FWD	1968	85	116	11.19-	*
35 TDI (DSRB)	Diesel	FWD	1968	110	150	11.19-	*
40 TDI quattro	Diesel	4WD	1968	147	200	12.20-	*
A3 Allstreet (8YJ) 02.24-				**[CAMBIADO]:Fastback (Compact executive car-D Segment)**			
40 TFSIe	Gasol./elec.	FWD	1498	150	204	11.24-	*
AUDI (FAW)							
A3 (88A) 07.20-				**[CAMBIADO]:Fastback (Compact executive car-D Segment)**			
35 TFSI (DJSA)	Gasolina	FWD	1498	110	150	01.21-	*
A3L (888) 07.20-				**Sedán (Compact executive car-D Segment)**			
35 TFSI (DJSA)	Gasolina	FWD	1395	110	150	01.21-	*
CUPRA							
FORMENTOR (KM7, KMP) 07.20-				**SUV (Compact SUV-J Segment)**			
1.5 TSI	Gasolina	FWD	1498	110	150	11.20-	*
2.0 TSI 4Drive	Gasolina	4WD	1984	140	190	08.20-	*
2.0 TSI	Gasolina	FWD	1984	180	245	03.21-	*
2.0 VZ	Gasolina	FWD	1984	195	265	11.24-	*
2.0 TSI 4Drive (DNFB)	Gasolina	4WD	1984	228	310	07.20-	*
2.0 VZ 4Drive	Gasolina	4WD	1984	245	333	08.24-	*
2.5 VZ5 4Drive	Gasolina	4WD	2480	287	390	10.21-	*
1.4 e-HYBRID	Gasol./elec.	FWD	1395	110	150	01.21-	*
1.4 e-HYBRID	Gasol./elec.	FWD	1395	150	204	01.21-	*
1.4 e-Hybrid VZ	Gasol./elec.	FWD	1395	180	245	02.21-	*
1.5 e-HYBRID VZ	Gasol./elec.	FWD	1498	200	272	06.24-	*
2.0 TDI	Diesel	FWD	1968	110	150	03.21-	*
2.0 TDI 4Drive	Diesel	4WD	1968	110	150	03.21-	*
LEON (KL1, KU1, KUG) 09.20-				**[CAMBIADO]:Fastback (Compact car-C Segment)**			
2.0 TSI	Gasolina	FWD	1984	180	245	06.21-	*
2.0 TSI	Gasolina	FWD	1984	221	300	01.21-	*
1.4 e-HYBRID	Gasol./elec.	FWD	1395	110	150	09.20-	*
1.4 e-HYBRID	Gasol./elec.	FWD	1395	150	204	09.20-	*
1.4 e-HYBRID	Gasol./elec.	FWD	1395	180	245	09.20-	*
1.5 VZ e-HYBRID	Gasol./elec.	FWD	1498	200	272	05.24-	*

LEON Sportstourer (KL8, KU8, KUD) 09.20-						[CAMBIADO]:Break (Compact car-C Segment)	
2.0 TSI	Gasolina	FWD	1984	180	245	06.21-	*
2.0 TSI	Gasolina	FWD	1984	221	300	06.21-	*
2.0 TSI 4Drive	Gasolina	4WD	1984	228	310	06.21-	*
2.0 VZ 4Drive	Gasolina	4WD	1984	245	333	07.24-	*
1.4 e-HYBRID	Gasol./eléc.	FWD	1395	110	150	09.20-	*
1.4 e-HYBRID	Gasol./eléc.	FWD	1395	150	204	09.20-	*
e-HYBRID	Gasol./eléc.	FWD	1395	180	245	09.20-	*
VZ e-HYBRID	Gasol./eléc.	FWD	1498	200	272	05.24-	*
TERRAMAR (KP1) 11.24-						**SUV (Compact Crossover SUV-C Segment)**	
2.0 TSI VZ 4Drive	Gasolina	4WD	1984	195	265	11.24-	*
1.5 e-HYBRID VZ	Gasol./eléc.	FWD	1498	200	272	11.24-	*
SEAT							
LEON IV (KL1, KLG) 11.19-						**[CAMBIADO]:Fastback (Compact car-C Segment)**	
1.0 TSI (DLAB)	Gasolina	FWD	999	66	90	03.20-	*
1.0 TSI (DLAA)	Gasolina	FWD	999	81	110	03.20-	*
1.0 TSI Mild Hybrid	Gasol./eléc.	FWD	999	81	110	08.20-	*
LEON IV Sportstourer (KL8, KLD) 03.20-						**[CAMBIADO]:Break (Compact car-C Segment)**	
1.0 TSI (DLAB)	Gasolina	FWD	999	66	90	03.20-	*
1.5 TGI	Gasol./Gas (CNG)	FWD	1498	96	131	05.21-	*
1.0 TSI Mild Hybrid	Gasol./eléc.	FWD	999	81	110	08.20-	*
2.0 TDI	Diesel	FWD	1968	85	115	11.20-	*
2.0 TDI (DSTB)	Diesel	FWD	1968	110	150	04.20-	*
2.0 TDI 4Drive	Diesel	4WD	1968	110	150	11.20-	*
SKODA							
OCTAVIA IV (NX3, NN3, PV3) 01.20-						**[CAMBIADO]:Fastback (Compact car-C Segment)**	
1.0 TSI (DLAA)	Gasolina	FWD	999	81	110	06.20-	*
1.4 TSI (DJKA)	Gasolina	FWD	1395	110	150	01.21-	*
1.5 TSI	Gasolina	FWD	1498	85	116	04.24-	*
1.5 TSI (DPCA)	Gasolina	FWD	1498	110	150	01.20-	*
1.6 SRE (CWVA)	Gasolina	FWD	1598	81	110	07.20-	*
2.0 TFSI (CZPB)	Gasolina	FWD	1984	140	190	07.20-	*
2.0 TSI 4x4 (CZPB,DNNA)	Gasolina	4WD	1984	140	190	07.20-	*
2.0 TSI RS (DLBA)	Gasolina	FWD	1984	180	245	03.20-	*
2.0 RS	Gasolina	FWD	1984	195	265	08.24-	*
1.5 TSI G-TEC (DHFA)	Gasol./Gas (CNG)	FWD	1498	96	131	06.20-	*
1.0 TSI e-TEC (DLAA)	Gasol./eléc.	FWD	999	81	110	06.20-	*
1.4 TSI iV (DGEA)	Gasol./eléc.	FWD	1395	110	150	06.20-	*
1.4 TSI RS iV (DJKA)	Gasol./eléc.	FWD	1395	110	150	06.20-	*
1.4 TSI iV	Gasol./eléc.	FWD	1395	150	204	06.20-	*
1.4 TSI RS iV	Gasol./eléc.	FWD	1395	180	245	06.20-	*

1.5 eTSI	Gasol./eléc.	FWD	1498	85	116	04.24-	*
1.5 TSI e-TEC	Gasol./eléc.	FWD	1498	110	150	11.20-	*
2.0 TDI (DSUD)	Diesel	FWD	1968	85	116	03.20-	*
2.0 TDI (CRVC)	Diesel	FWD	1968	105	143	06.20-	*
2.0 TDI (DSTB)	Diesel	FWD	1968	110	150	01.20-	*
2.0 TDI 4x4	Diesel	4WD	1968	110	150	09.20-	*
2.0 TDI RS (DTUA)	Diesel	FWD	1968	147	200	07.20-	*
2.0 TDI RS 4x4 (DTUA)	Diesel	4WD	1968	147	200	07.20-	*
OCTAVIA IV Combi (NX5, PV5) 11.19-				**[CAMBIADO]:Break (Compact car-C Segment)**			
1.0 TSI (DLAA)	Gasolina	FWD	999	81	110	06.20-	*
1.4 TSI (DJKA)	Gasolina	FWD	1395	110	150	06.20-	*
1.5 TSI	Gasolina	FWD	1498	85	116	04.24-	*
1.5 TSI (DPCA)	Gasolina	FWD	1498	110	150	11.19-	*
1.6 SRE (CWVA)	Gasolina	FWD	1598	81	110	06.20-	*
1.6 SRE	Gasolina	FWD	1598	81	110	09.20-	*
2.0 TFSI (CZPB)	Gasolina	FWD	1984	140	190	09.20-	*
2.0 TSI 4x4	Gasolina	4WD	1984	140	190	09.20-	*
2.0 TSI RS (DLBA)	Gasolina	FWD	1984	180	245	03.20-	*
2.0 RS	Gasolina	FWD	1984	195	265	08.24-	*
1.5 TSI G-TEC (DHFA)	Gasol./Gas (CNG)	FWD	1498	96	131	06.20-	*
1.0 TSI e-TEC (DLAA)	Gasol./eléc.	FWD	999	81	110	06.20-	*
1.4 TSI iV (DGEA)	Gasol./eléc.	FWD	1395	110	150	06.20-	*
1.4 TSI RS iV (DJKA)	Gasol./eléc.	FWD	1395	110	150	06.20-	*
1.4 TSI iV	Gasol./eléc.	FWD	1395	150	204	06.20-	*
1.4 TSI RS iV	Gasol./eléc.	FWD	1395	180	245	06.20-	*
1.5 eTSI	Gasol./eléc.	FWD	1498	85	116	04.24-	*
1.5 TSI e-TEC	Gasol./eléc.	FWD	1498	110	150	11.20-	*
2.0 TDI (DSUD)	Diesel	FWD	1968	85	116	11.19-	*
2.0 TDI (CRVC)	Diesel	FWD	1968	105	143	06.20-	*
2.0 TDI (DSTB)	Diesel	FWD	1968	110	150	11.19-	*
2.0 TDI 4x4	Diesel	4WD	1968	110	150	09.20-	*
2.0 TDI RS (DTUA)	Diesel	FWD	1968	147	200	07.20-	*
2.0 TDI RS 4x4 (DTUA)	Diesel	4WD	1968	147	200	07.20-	*
SKODA (SVW)							
OCTAVIA PRO (0Q3) 05.21-				**[CAMBIADO]:Fastback (Compact car-C Segment)**			
1.4 (DJSA)	Gasolina	FWD	1395	110	150	05.21-	*
VW							
CADDY IV (SBA, SBH) 09.20-				**Furgoneta/MPV (LCVs-N1 Segment)**			
1.5 TSi EVO	Gasolina	FWD	1498	84	114	01.21-11.24	*
1.6 SRE	Gasolina	FWD	1598	81	110	02.21-	*
2.0 TDi BMT (DTRF)	Diesel	FWD	1968	55	75	09.20-	*
2.0 TDi BMT (DTRE)	Diesel	FWD	1968	75	102	09.20-	*
2.0 TDi BMT (DTRC)	Diesel	FWD	1968	90	122	09.20-	*
2.0 TDI BMT 4motion	Diesel	4WD	1968	90	122	03.21-	*

LISTA DE APLICACIONES - BUYERS GUIDE

CADDY IV (SBB, SBJ) 09.20-							MPV (Mini MPV-M1 Segment)
1.5 TSi EVO	Gasolina	FWD	1498	84	114	01.21-11.24	*
1.6 SRE	Gasolina	FWD	1598	81	110	02.21-	*
2.0 TDi BMT	Diesel	FWD	1968	55	75	09.20-	*
2.0 TDi BMT (DTRE)	Diesel	FWD	1968	75	102	09.20-	*
2.0 TDi BMT (DTRC)	Diesel	FWD	1968	90	122	09.20-	*
2.0 TDI BMT 4motion	Diesel	4WD	1968	90	122	03.21-	*
CADDY CALIFORNIA V (SBB, SBJ) 09.20-							**MPV (Mini MPV-M1 Segment)**
1.5 TSi EVO	Gasolina	FWD	1498	84	114	01.21-11.24	*
1.6 SRE	Gasolina	FWD	1598	81	110	02.21-	*
2.0 TDi BMT	Diesel	FWD	1968	55	75	09.20-	*
2.0 TDi BMT	Diesel	FWD	1968	75	102	09.20-	*
2.0 TDi BMT	Diesel	FWD	1968	90	122	09.20-	*
2.0 TDI BMT 4motion	Diesel	4WD	1968	90	122	03.21-	*
GOLF VIII ALLTRACK (CG5) 11.20-							**[CAMBIADO]:Break (Compact car-C Segment)**
2.0 TSI 4motion	Gasolina	4WD	1984	140	190	03.21-11.24	*
2.0 TDI 4motion	Diesel	4WD	1968	147	200	11.20-	*
GOLF VIII (CD1, DA1) 07.19-							**[CAMBIADO]:Fastback (Compact car-C Segment)**
1.0 TSI (DLAB)	Gasolina	FWD	999	66	90	02.20-	*
1.0 TSI (DLAA)	Gasolina	FWD	999	81	110	02.20-	*
1.4 TSI (DJKA)	Gasolina	FWD	1395	110	150	01.21-	*
1.5 TSI (DPBA)	Gasolina	FWD	1495	96	131	07.19-	*
1.5 TSI (DPCA)	Gasolina	FWD	1498	110	150	07.19-	*
2.0 TSI	Gasolina	FWD	1984	140	190	06.21-	*
2.0 TSI 4motion	Gasolina	4WD	1984	140	190	06.21-	*
2.0 GTI (DNPA)	Gasolina	FWD	1984	180	245	08.20-	*
2.0 GTI (DLBA)	Gasolina	FWD	1984	180	245	01.21-	*
2.0 GTI	Gasolina	FWD	1984	195	265	06.24-	*
2.0 GTI Clubsport	Gasolina	FWD	1984	221	300	10.20-	*
2.0 TSi R 4motion	Gasolina	4WD	1984	235	320	09.20-	*
2.0 TSi R 4motion (DNNF)	Gasolina	4WD	1984	245	333	07.22-	*
1.5 TGI	Gasol./Gas (CNG)	FWD	1498	96	131	09.20-	*
1.0 eTSI	Gasol./elec.	FWD	999	81	110	06.20-	*
1.4 GTE Plug-in Hybrid (DGEA)	Gasol./elec.	FWD	1395	110	150	07.20-	*
1.4 TSI eHybrid	Gasol./elec.	FWD	1395	110	150	07.20-	*
1.4 TSI eHybrid	Gasol./elec.	FWD	1395	150	204	07.20-	*
1.4 GTE Plug-in Hybrid	Gasol./elec.	FWD	1395	180	245	07.20-	*
1.5 eTSI	Gasol./elec.	FWD	1495	96	131	11.20-	*
1.5 eTSI (DFYA)	Gasol./elec.	FWD	1498	110	150	12.19-	*
1.5 eHybrid	Gasol./elec.	FWD	1498	150	204	06.24-	*
1.5 GTE Plug-in Hybrid	Gasol./elec.	FWD	1498	200	272	06.24-	*
2.0 TDI (DSUD)	Diesel	FWD	1968	85	116	08.19-	*
2.0 TDI (DSRB)	Diesel	FWD	1968	110	150	08.19-	*
2.0 TDI 4motion	Diesel	4WD	1968	110	150	06.21-	*

2.0 TDI 4motion	Diesel	4WD	1968	147	200	09.20-	*
2.0 TDI GTD	Diesel	FWD	1968	147	200	09.20-	*
GOLF VIII Variant (CG5, DB5) 08.20-				**[CAMBIADO]:Break (Compact car-C Segment)**			
1.0 TSI (DLAB)	Gasolina	FWD	999	66	90	08.20-	*
1.0 TSI (DLAA)	Gasolina	FWD	999	81	110	08.20-	*
1.4 TSI (DJKA)	Gasolina	FWD	1395	110	150	01.21-	*
1.5 TSI (DPBA)	Gasolina	FWD	1495	96	131	08.20-	*
1.5 TSI (DPCA)	Gasolina	FWD	1498	110	150	08.20-	*
2.0 TSI	Gasolina	FWD	1984	140	190	06.21-11.24	*
2.0 TSI 4motion	Gasolina	4WD	1984	140	190	06.21-11.24	*
2.0 GTI (DNPA)	Gasolina	FWD	1984	180	245	09.20-	*
2.0 TSi R 4motion	Gasolina	4WD	1984	235	320	06.21-	*
2.0 TSi R 4motion	Gasolina	4WD	1984	245	333	06.24-	*
1.5 TGI	Gasol./Gas (CNG)	FWD	1498	96	131	09.20-	*
2.0 TDI	Diesel	FWD	1968	85	116	08.20-	*
2.0 TDI (DTSB)	Diesel	FWD	1968	110	150	08.20-	*
2.0 TDI 4motion	Diesel	4WD	1968	110	150	06.21-	*
2.0 TDI 4motion	Diesel	4WD	1968	147	200	09.20-	*
TIGUAN III (CT1) 09.23-				**SUV (Compact SUV-J Segment)**			
2.0 TSI 4motion	Gasolina	4WD	1984	150	204	11.24-	*
2.0 TSI 4motion	Gasolina	4WD	1984	195	265	08.24-	*
1.5 eTSI	Gasol./elec.	FWD	1498	96	131	09.23-	*
1.5 eTSI	Gasol./elec.	FWD	1498	110	150	09.23-	*
1.5 TSI eHybrid	Gasol./elec.	FWD	1498	150	204	03.24-	*
1.5 TSI eHybrid	Gasol./elec.	FWD	1498	200	272	03.24-	*
2.0 TDI	Diesel	FWD	1968	110	150	09.23-	*
2.0 TDI 4motion	Diesel	4WD	1968	142	193	09.23-	*
VW (FAW)							
GOLF VIII (CN1) 11.20-				**[CAMBIADO]:Fastback (Compact car-C Segment)**			
200TSi (DLSA,SLSB)	Gasolina	FWD	1197	85	116	11.20-	*
280TSi (DJSA)	Gasolina	FWD	1395	110	150	11.20-	*