LISTA DE APLICACIONES - BUYERS GUIDE

RB2099-203

8 424073 289346

Qty: 300 Weight: 1.125

O.E.M.	MAKE
5Q0 698 451 AB	VW
5Q0 698 451 AE	VW
5Q0 698 451 H	VW
5Q0 698 451 J	VW

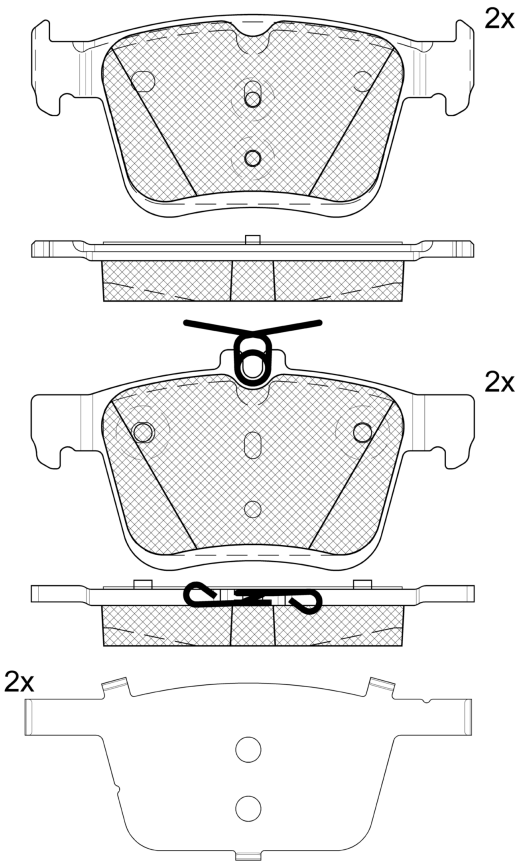

Ref. 652723

RB2099-203

E 9 90R-02A0111/3530

Ate - Teves

122.8x56.3x16.4
123.1x61.3x16.4

WVA
22388
25008

Sin Filas

		Trac.	CC	Kw	CV		Front / Rear
AUDI							
Q2 (GAB, GAG) 06.16-					**SUV (Compact SUV-J Segment)**		
30 TFSI	Gasolina	FWD	999	81	110	08.20-	*
1.0 TFSI (CHZJ)	Gasolina	FWD	999	85	115	10.16-10.20	*
30 TFSI (DKRF)	Gasolina	FWD	999	85	116	07.18-	*
1.4	Gasolina	FWD	1395	110	150	06.21-	*
1.6 TDI (DDYA)	Diesel	FWD	1598	85	115	06.16-07.18	*
30 TDI (DGTE)	Diesel	FWD	1598	85	115	07.18-10.20	*
30 TDI	Diesel	FWD	1968	85	116	02.21-	*
SEAT							
ATECA (KH7, KHP) 04.16-					**SUV (Compact SUV-J Segment)**		
1.0 TSI	Gasolina	FWD	999	81	110	09.20-	*
2.0 TDI	Diesel	FWD	1968	85	115	01.21-	*
SKODA							
KAROQ (NU7, ND7) 07.17-					**SUV (Compact Crossover CUV-C Segment)**		
1.4 TSI 4x4 (CZEA)	Gasolina	4WD	1395	110	150	09.19-	*
VW							
TAOS (CL1, CP1, CQ1) 07.20-					**SUV (Compact Crossover CUV-C Segment)**		
1.4 TSI (DSJA)	Gasolina	FWD	1395	110	150	10.20-	*
1.4 TSI 4motion	Gasolina	4WD	1395	110	150	05.21-	*
1.5 TSI (DNKA)	Gasolina	FWD	1498	118	160	02.21-	*
1.5 TSI 4motion (DNKA)	Gasolina	4WD	1498	118	160	02.21-	*
1.6 MPi	Gasolina	FWD	1598	81	110	07.21-	*

1.4 250 TSI Total Flex (CWLA)	Gasol./Etanol	FWD	1395	110	150	06.21-	*
T-ROC (A11, D11) 07.17-							**SUV (Mini SUV-J Segment)**
1.0 TSI	Gasolina	FWD	999	81	110	09.20-	*
1.0 TSI (CHZJ)	Gasolina	FWD	999	85	116	07.17-	*
1.0 TSI (DKRF)	Gasolina	FWD	999	85	116	07.17-	*
1.5 TSI (DADA)	Gasolina	FWD	1498	110	150	11.17-	*
1.5 TSI (DPCA)	Gasolina	FWD	1498	110	150	11.17-	*
2.0 TSI 4motion (CZPB)	Gasolina	4WD	1984	140	190	07.17-	*
2.0 TSI 4motion (DKZA)	Gasolina	4WD	1984	140	190	07.17-	*
1.6 TDI (DGTE)	Diesel	FWD	1598	85	115	03.18-06.21	*
2.0 TDI SCR	Diesel	FWD	1968	85	116	11.20-	*
2.0 TDI (DFFA)	Diesel	FWD	1968	110	150	03.18-	*
2.0 TDI 4motion (DFFA)	Diesel	4WD	1968	110	150	09.17-	*
2.0 TDI 4motion (DFHA)	Diesel	4WD	1968	140	190	07.19-06.21	*