LISTA DE APLICACIONES - BUYERS GUIDE

RB1967

8 424073 136794

Qty: 300 Weight: 1.175

O.E.M.	MAKE
2K5 698 451	VW
5K0 698 451	VW
5K0 698 451 A	VW
5K0 698 451 C	SKODA
86 60 000 785	RENAULT
86 60 004 438	RENAULT
JZW 698 451 Q	VW

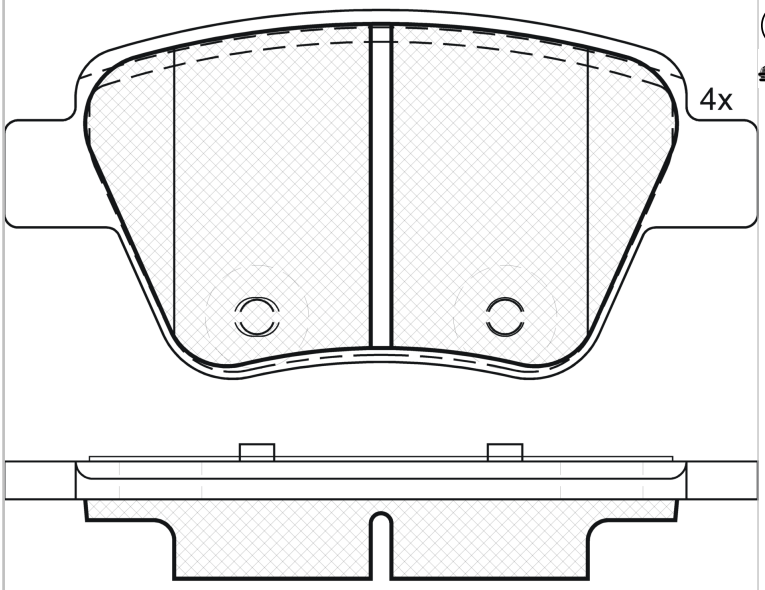

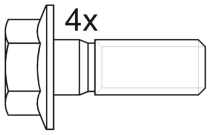

2-Ref. 690059

RB1967

E 9 90R-01111/2801

Bosch

109.4x53.6x17.7

WVA	FMSI
24563	D1456-8656
	D1456-8959

Sin Filas

Front / Rear

		Trac.	CC	Kw	CV		
AUDI							
A1 (8X1, 8XK) 05.10-				**[CAMBIADO]:Fastback (Supermini car-B Segment)**			
1.2 TFSI (CBZA)	Gasolina	FWD	1197	63	86	05.10-04.15	*
1.4 TFSI (CAXA)	Gasolina	FWD	1390	90	122	05.10-04.15	*
1.4 TFSI (CNVA)	Gasolina	FWD	1390	90	122	05.10-04.15	*
1.4 TFSI (CAVG)	Gasolina	FWD	1390	136	185	01.11-04.15	*
1.4 TFSI (CTHG)	Gasolina	FWD	1390	136	185	01.11-04.15	*
1.4 TFSI (CZCA)	Gasolina	FWD	1395	92	125	11.14-10.18	*
1.4 TFSI (CZDD)	Gasolina	FWD	1395	92	125	11.14-10.18	*
1.4 TFSI (CPTA)	Gasolina	FWD	1395	103	140	04.12-04.15	*
1.4 TSI (CZEA)	Gasolina	FWD	1395	110	150	11.14-10.18	*
2.0 TFSI quattro (CDLH)	Gasolina	4WD	1984	188	256	03.12-11.12	*
1.4 TDI (CUSB)	Diesel	FWD	1422	66	90	11.14-10.18	*
1.6 TDI (CAYB)	Diesel	FWD	1598	66	90	03.11-04.15	*
1.6 TDI (CAYC)	Diesel	FWD	1598	77	105	05.10-04.15	*
1.6 TDI (CXMA)	Diesel	FWD	1598	85	115	11.14-10.18	*
2.0 TDI (CFHB)	Diesel	FWD	1968	100	136	05.12-04.15	*
2.0 TDI (CFHD)	Diesel	FWD	1968	105	143	09.11-04.15	*
A1 Sportback (8XA, 8XF) 09.11-				**[CAMBIADO]:Fastback (Supermini car-B Segment)**			
1.2 TFSI (CBZA)	Gasolina	FWD	1197	63	86	01.12-04.15	*
1.4 TFSI (CAXA)	Gasolina	FWD	1390	90	122	11.11-04.15	*
1.4 TFSI (CNVA)	Gasolina	FWD	1390	90	122	11.11-04.15	*
1.4 TFSI (CAVG)	Gasolina	FWD	1390	136	185	11.11-04.15	*
1.4 TFSI (CTHG)	Gasolina	FWD	1390	136	185	11.11-04.15	*

1.4 TFSI (CZCA)	Gasolina	FWD	1395	92	125	11.14-10.18	*
1.4 TFSI (CZDD)	Gasolina	FWD	1395	92	125	11.14-10.18	*
1.4 TFSI (CPTA)	Gasolina	FWD	1395	103	140	04.12-04.15	*
1.4 TSI (CZEA)	Gasolina	FWD	1395	110	150	11.14-10.18	*
1.4 TDI (CUSB)	Diesel	FWD	1422	66	90	11.14-10.18	*
1.6 TDI (CAYB)	Diesel	FWD	1598	66	90	11.11-04.15	*
1.6 TDI (CAYC)	Diesel	FWD	1598	77	105	11.11-04.15	*
1.6 TDI (CXMA)	Diesel	FWD	1598	85	115	11.14-10.18	*
2.0 TDI (CFHB)	Diesel	FWD	1968	100	136	05.12-04.15	*
2.0 TDI (CFHD)	Diesel	FWD	1968	105	143	09.11-04.15	*
A3 II (8P1) 05.03-12.13						**[CAMBIADO]:Fastback (Compact executive car-D Segment)**	
1.2 TSI (CBZB)	Gasolina	FWD	1197	77	105	04.10-08.12	*
1.4 TFSI (CAXC)	Gasolina	FWD	1390	92	125	09.07-08.12	*
1.4 TFSI (CMSA)	Gasolina	FWD	1390	92	125	09.07-08.12	*
1.6 (BGU)	Gasolina	FWD	1595	75	102	05.03-08.12	*
1.6 (BSE)	Gasolina	FWD	1595	75	102	05.03-08.12	*
1.6 (BSF)	Gasolina	FWD	1595	75	102	05.03-08.12	*
1.6 FSI (BAG)	Gasolina	FWD	1598	85	115	08.03-09.07	*
1.6 FSI (BLF)	Gasolina	FWD	1598	85	115	08.03-09.07	*
1.6 FSI (BLP)	Gasolina	FWD	1598	85	115	08.03-09.07	*
1.8 TFSI (BYT)	Gasolina	FWD	1798	118	160	11.06-08.12	*
1.8 TFSI (BZB)	Gasolina	FWD	1798	118	160	11.06-08.12	*
1.8 TFSI (CDAA)	Gasolina	FWD	1798	118	160	11.06-08.12	*
1.8 TFSI quattro (CDAA)	Gasolina	4WD	1798	118	160	07.08-08.12	*
2.0 FSI (AXW)	Gasolina	FWD	1984	110	150	05.03-06.08	*
2.0 FSI (BLR)	Gasolina	FWD	1984	110	150	05.03-06.08	*
2.0 FSI (BLX)	Gasolina	FWD	1984	110	150	05.03-06.08	*
2.0 FSI (BLY)	Gasolina	FWD	1984	110	150	05.03-06.08	*
2.0 FSI (BMB)	Gasolina	FWD	1984	110	150	05.03-06.08	*
2.0 FSI (BVY)	Gasolina	FWD	1984	110	150	05.03-06.08	*
2.0 FSI (BVZ)	Gasolina	FWD	1984	110	150	05.03-06.08	*
2.0 TFSI (AXX)	Gasolina	FWD	1984	147	200	09.04-08.12	*
2.0 TFSI (BWA)	Gasolina	FWD	1984	147	200	09.04-08.12	*
2.0 TFSI (CAWB)	Gasolina	FWD	1984	147	200	09.04-08.12	*
2.0 TFSI (CCZA)	Gasolina	FWD	1984	147	200	09.04-08.12	*
2.0 TFSI quattro (AXX)	Gasolina	4WD	1984	147	200	09.04-08.12	*
2.0 TFSI quattro (BWA)	Gasolina	4WD	1984	147	200	09.04-08.12	*
2.0 TFSI quattro (CBFA)	Gasolina	4WD	1984	147	200	09.04-08.12	*
2.0 TFSI quattro (CCTA)	Gasolina	4WD	1984	147	200	09.04-08.12	*
2.0 TFSI quattro (CCZA)	Gasolina	4WD	1984	147	200	09.04-08.12	*
S3 quattro (BZC)	Gasolina	4WD	1984	188	256	02.07-08.12	*
S3 quattro (CDLC)	Gasolina	4WD	1984	188	256	02.07-08.12	*
S3 quattro (BHZ)	Gasolina	4WD	1984	195	265	11.06-08.12	*
S3 quattro (CDLA)	Gasolina	4WD	1984	195	265	11.06-08.12	*
3.2 V6 quattro (BDB)	Gasolina	4WD	3189	184	250	07.03-05.09	*
3.2 V6 quattro (BMJ)	Gasolina	4WD	3189	184	250	07.03-05.09	*
3.2 V6 quattro (BUB)	Gasolina	4WD	3189	184	250	07.03-05.09	*
1.6 E-Power (CCSA)	Gasol./Etanol	FWD	1595	75	102	01.11-08.12	*
1.6 E-Power (CMXA)	Gasol./Etanol	FWD	1595	75	102	01.11-08.12	*
1.6 TDI (CAYB)	Diesel	FWD	1598	66	90	05.09-08.12	*

1.6 TDI (CAYC)	Diesel	FWD	1598	77	105	05.09-08.12	*
1.9 TDI (BKC)	Diesel	FWD	1896	77	105	05.03-05.10	*
1.9 TDI (BLS)	Diesel	FWD	1896	77	105	05.03-05.10	*
1.9 TDI (BXE)	Diesel	FWD	1896	77	105	05.03-05.10	*
2.0 TDI (AZV)	Diesel	FWD	1968	100	136	05.03-08.12	*
2.0 TDI (CBAA)	Diesel	FWD	1968	100	136	05.03-08.12	*
2.0 TDI (CFFA)	Diesel	FWD	1968	100	136	05.03-08.12	*
2.0 TDI quattro (AZV)	Diesel	4WD	1968	100	136	05.03-06.08	*
2.0 TDI (BMM)	Diesel	FWD	1968	103	140	06.05-06.08	*
2.0 TDI 16V (BKD)	Diesel	FWD	1968	103	140	05.03-08.12	*
2.0 TDI 16V (CBAB)	Diesel	FWD	1968	103	140	05.03-08.12	*
2.0 TDI 16V (CBEA)	Diesel	FWD	1968	103	140	05.03-08.12	*
2.0 TDI 16V (CFFB)	Diesel	FWD	1968	103	140	05.03-08.12	*
2.0 TDI 16V (CLJA)	Diesel	FWD	1968	103	140	05.03-08.12	*
2.0 TDI 16V quattro (BKD)	Diesel	4WD	1968	103	140	08.04-08.12	*
2.0 TDI 16V quattro (CBAB)	Diesel	4WD	1968	103	140	08.04-08.12	*
2.0 TDI 16V quattro (CFFB)	Diesel	4WD	1968	103	140	08.04-08.12	*
2.0 TDI quattro (BMM)	Diesel	4WD	1968	103	140	01.06-06.08	*
2.0 TDI (BUY)	Diesel	FWD	1968	120	163	06.06-06.08	*
2.0 TDI (BMN)	Diesel	FWD	1968	125	170	03.06-08.12	*
2.0 TDI (CBBB)	Diesel	FWD	1968	125	170	03.06-08.12	*
2.0 TDI (CFGB)	Diesel	FWD	1968	125	170	03.06-08.12	*
2.0 TDI quattro (BMN)	Diesel	4WD	1968	125	170	03.06-08.12	*
2.0 TDI quattro (CBBB)	Diesel	4WD	1968	125	170	03.06-08.12	*
2.0 TDI quattro (CFGB)	Diesel	4WD	1968	125	170	03.06-08.12	*
A3 II (8P7) 04.08-05.13				**Cabrío (Compact executive car-D Segment)**			
1.2 TFSI (CBZB)	Gasolina	FWD	1197	77	105	03.10-05.13	*
1.4 TFSI (CAXC)	Gasolina	FWD	1390	92	125	02.11-05.13	*
1.6 (BSE)	Gasolina	FWD	1595	75	102	09.08-05.10	*
1.8 TFSI (BZB)	Gasolina	FWD	1798	118	160	04.08-05.13	*
1.8 TFSI (CDAA)	Gasolina	FWD	1798	118	160	04.08-05.13	*
2.0 TFSI (CAWB)	Gasolina	FWD	1984	147	200	04.08-05.13	*
2.0 TFSI (CCZA)	Gasolina	FWD	1984	147	200	04.08-05.13	*
1.6 TDI (CAYC)	Diesel	FWD	1598	77	105	05.09-05.13	*
1.9 TDI (BLS)	Diesel	FWD	1896	77	105	04.08-10.09	*
2.0 TDI (CBAA)	Diesel	FWD	1968	100	136	04.08-05.13	*
2.0 TDI (CFFA)	Diesel	FWD	1968	100	136	04.08-05.13	*
2.0 TDI (CBAB)	Diesel	FWD	1968	103	140	04.08-05.13	*
2.0 TDI (CFFB)	Diesel	FWD	1968	103	140	04.08-05.13	*
A3 II Sportback (8PA) 09.04-12.15				**[CAMBIADO]:Fastback (Compact executive car-D Segment)**			
1.2 TSI (CBZB)	Gasolina	FWD	1197	77	105	04.10-03.13	*
1.4 TFSI (CAXC)	Gasolina	FWD	1390	92	125	09.07-03.13	*
1.4 TFSI (CMSA)	Gasolina	FWD	1390	92	125	09.07-03.13	*
1.6 (BGU)	Gasolina	FWD	1595	75	102	09.04-03.13	*
1.6 (BSE)	Gasolina	FWD	1595	75	102	09.04-03.13	*
1.6 (BSF)	Gasolina	FWD	1595	75	102	09.04-03.13	*
1.6 FSI (BLF)	Gasolina	FWD	1598	85	115	09.04-09.07	*
1.6 FSI (BLP)	Gasolina	FWD	1598	85	115	09.04-09.07	*
1.8 TFSI (BYT)	Gasolina	FWD	1798	118	160	11.06-03.13	*
1.8 TFSI (BZB)	Gasolina	FWD	1798	118	160	11.06-03.13	*

1.8 TFSI (CDAA)	Gasolina	FWD	1798	118	160	11.06-03.13	*
1.8 TFSI quattro (CDAA)	Gasolina	4WD	1798	118	160	07.08-03.13	*
2.0 FSI (AXW)	Gasolina	FWD	1984	110	150	09.04-06.08	*
2.0 FSI (BLR)	Gasolina	FWD	1984	110	150	09.04-06.08	*
2.0 FSI (BLX)	Gasolina	FWD	1984	110	150	09.04-06.08	*
2.0 FSI (BLY)	Gasolina	FWD	1984	110	150	09.04-06.08	*
2.0 FSI (BMB)	Gasolina	FWD	1984	110	150	09.04-06.08	*
2.0 FSI (BVY)	Gasolina	FWD	1984	110	150	09.04-06.08	*
2.0 FSI (BVZ)	Gasolina	FWD	1984	110	150	09.04-06.08	*
2.0 TFSI (AXX)	Gasolina	FWD	1984	147	200	09.04-03.13	*
2.0 TFSI (BPY)	Gasolina	FWD	1984	147	200	09.04-03.13	*
2.0 TFSI (BWA)	Gasolina	FWD	1984	147	200	09.04-03.13	*
2.0 TFSI (CAWB)	Gasolina	FWD	1984	147	200	09.04-03.13	*
2.0 TFSI (CBFA)	Gasolina	FWD	1984	147	200	09.04-03.13	*
2.0 TFSI (CCTA)	Gasolina	FWD	1984	147	200	09.04-03.13	*
2.0 TFSI (CCZA)	Gasolina	FWD	1984	147	200	09.04-03.13	*
2.0 TFSI quattro (AXX)	Gasolina	4WD	1984	147	200	09.04-03.13	*
2.0 TFSI quattro (BPY)	Gasolina	4WD	1984	147	200	09.04-03.13	*
2.0 TFSI quattro (BWA)	Gasolina	4WD	1984	147	200	09.04-03.13	*
2.0 TFSI quattro (CBFA)	Gasolina	4WD	1984	147	200	09.04-03.13	*
2.0 TFSI quattro (CCTA)	Gasolina	4WD	1984	147	200	09.04-03.13	*
2.0 TFSI quattro (CCZA)	Gasolina	4WD	1984	147	200	09.04-03.13	*
S3 quattro (CDLC)	Gasolina	4WD	1984	188	256	07.08-03.13	*
S3 quattro (BHZ)	Gasolina	4WD	1984	195	265	06.08-03.13	*
S3 quattro (CDLA)	Gasolina	4WD	1984	195	265	06.08-03.13	*
RS3 quattro (CEPA)	Gasolina	4WD	2480	250	340	01.11-12.12	*
3.2 V6 quattro (BDB)	Gasolina	4WD	3189	184	250	09.04-05.09	*
3.2 V6 quattro (BMJ)	Gasolina	4WD	3189	184	250	09.04-05.09	*
3.2 V6 quattro (BUB)	Gasolina	4WD	3189	184	250	09.04-05.09	*
1.6 E-Power (CCSA)	Gasol./Etanol	FWD	1595	75	102	01.11-03.13	*
1.6 E-Power (CMXA)	Gasol./Etanol	FWD	1595	75	102	01.11-03.13	*
1.6 TDI (CAYB)	Diesel	FWD	1598	66	90	05.09-03.13	*
1.6 TDI (CAYC)	Diesel	FWD	1598	77	105	05.09-03.13	*
1.9 TDI (BKC)	Diesel	FWD	1896	77	105	09.04-05.10	*
1.9 TDI (BLS)	Diesel	FWD	1896	77	105	09.04-05.10	*
1.9 TDI (BXE)	Diesel	FWD	1896	77	105	09.04-05.10	*
2.0 TDI (AZV)	Diesel	FWD	1968	100	136	09.04-03.13	*
2.0 TDI (CBAA)	Diesel	FWD	1968	100	136	09.04-03.13	*
2.0 TDI (CFFA)	Diesel	FWD	1968	100	136	09.04-03.13	*
2.0 TDI (BMM)	Diesel	FWD	1968	103	140	06.05-06.08	*
2.0 TDI 16V (BKD)	Diesel	FWD	1968	103	140	09.04-03.13	*
2.0 TDI 16V (CBAB)	Diesel	FWD	1968	103	140	09.04-03.13	*
2.0 TDI 16V (CBEA)	Diesel	FWD	1968	103	140	09.04-03.13	*
2.0 TDI 16V (CFFB)	Diesel	FWD	1968	103	140	09.04-03.13	*
2.0 TDI 16V (CLJA)	Diesel	FWD	1968	103	140	09.04-03.13	*
2.0 TDI 16V quattro (BKD)	Diesel	4WD	1968	103	140	11.05-03.13	*
2.0 TDI 16V quattro (CBAB)	Diesel	4WD	1968	103	140	11.05-03.13	*
2.0 TDI 16V quattro (CFFB)	Diesel	4WD	1968	103	140	11.05-03.13	*
2.0 TDI quattro (BMM)	Diesel	4WD	1968	103	140	01.06-06.08	*
2.0 TDI (BUY)	Diesel	FWD	1968	120	163	06.06-06.08	*
2.0 TDI (BMN)	Diesel	FWD	1968	125	170	03.06-03.13	*

2.0 TDI (CBBB)	Diesel	FWD	1968	125	170	03.06-03.13	*
2.0 TDI (CFGB)	Diesel	FWD	1968	125	170	03.06-03.13	*
2.0 TDI quattro (BMN)	Diesel	4WD	1968	125	170	03.06-03.13	*
2.0 TDI quattro (CBBB)	Diesel	4WD	1968	125	170	03.06-03.13	*
2.0 TDI quattro (CFGB)	Diesel	4WD	1968	125	170	03.06-03.13	*
SEAT							
ALTEA (5P1) 03.04-				**MPV (Compact MPV-M1 Segment)**			
1.2 TSI (CBZB)	Gasolina	FWD	1197	77	105	04.10-07.15	*
1.4 16V (BXW)	Gasolina	FWD	1390	63	86	05.06-05.11	*
1.4 16V (CGGB)	Gasolina	FWD	1390	63	86	05.06-05.11	*
1.4 TSI (CAXC)	Gasolina	FWD	1390	92	125	11.07-07.15	*
1.6 (BGU)	Gasolina	FWD	1595	75	102	03.04-03.10	*
1.6 (BSE)	Gasolina	FWD	1595	75	102	03.04-03.10	*
1.6 (BSF)	Gasolina	FWD	1595	75	102	03.04-03.10	*
1.6 (CCSA)	Gasolina	FWD	1595	75	102	03.04-03.10	*
1.8 TFSI (BYT)	Gasolina	FWD	1798	118	160	01.07-07.15	*
1.8 TFSI (BZB)	Gasolina	FWD	1798	118	160	01.07-07.15	*
1.8 TFSI (CDAA)	Gasolina	FWD	1798	118	160	01.07-07.15	*
2.0 FSI (BLR)	Gasolina	FWD	1984	110	150	05.04-03.09	*
2.0 FSI (BLY)	Gasolina	FWD	1984	110	150	05.04-03.09	*
2.0 FSI (BVY)	Gasolina	FWD	1984	110	150	05.04-03.09	*
2.0 FSI (BVZ)	Gasolina	FWD	1984	110	150	05.04-03.09	*
2.0 TFSI (BWA)	Gasolina	FWD	1984	147	200	04.06-05.09	*
1.6 LPG (CHGA)	Gasol./Gas (LPG)	FWD	1595	75	102	09.09-06.13	*
1.6 MultiFuel (CMXA)	Gasol./Etanol	FWD	1595	75	102	11.10-05.11	*
1.6 TDI (CAYB)	Diesel	FWD	1598	66	90	11.10-07.15	*
1.6 TDI (CAYC)	Diesel	FWD	1598	77	105	10.09-07.15	*
1.9 TDI (BXF)	Diesel	FWD	1896	66	90	08.09-12.10	*
1.9 TDI (BJB)	Diesel	FWD	1896	77	105	04.04-12.10	*
1.9 TDI (BKC)	Diesel	FWD	1896	77	105	04.04-12.10	*
1.9 TDI (BLS)	Diesel	FWD	1896	77	105	04.04-12.10	*
1.9 TDI (BXE)	Diesel	FWD	1896	77	105	04.04-12.10	*
2.0 TDI (AZV)	Diesel	FWD	1968	100	136	03.04-05.09	*
2.0 TDI (BMM)	Diesel	FWD	1968	103	140	11.05-11.10	*
2.0 TDI 16V (BKD)	Diesel	FWD	1968	103	140	03.04-07.15	*
2.0 TDI 16V (CFHC)	Diesel	FWD	1968	103	140	03.04-07.15	*
2.0 TDI 16V 4WD (CFHC)	Diesel	4WD	1968	103	140	10.10-	*
2.0 TDI (BMN)	Diesel	FWD	1968	125	170	03.06-05.10	*
2.0 TDI (CEGA)	Diesel	FWD	1968	125	170	03.06-05.10	*
ALTEA XL (5P5, 5P8) 10.06-				**MPV (Compact MPV-M1 Segment)**			
1.2 TSI (CBZB)	Gasolina	FWD	1197	77	105	04.10-07.15	*
1.4 16V (BXW)	Gasolina	FWD	1390	63	86	10.06-06.13	*
1.4 16V (CGGB)	Gasolina	FWD	1390	63	86	10.06-06.13	*
1.4 TSI (CAXC)	Gasolina	FWD	1390	92	125	11.07-07.15	*
1.6 (BGU)	Gasolina	FWD	1595	75	102	10.06-11.10	*
1.6 (BSE)	Gasolina	FWD	1595	75	102	10.06-11.10	*
1.6 (BSF)	Gasolina	FWD	1595	75	102	10.06-11.10	*
1.6 (CCSA)	Gasolina	FWD	1595	75	102	10.06-11.10	*
1.8 TFSI (BYT)	Gasolina	FWD	1798	118	160	01.07-07.15	*
1.8 TFSI (BZB)	Gasolina	FWD	1798	118	160	01.07-07.15	*

1.8 TFSI (CDAA)	Gasolina	FWD	1798	118	160	01.07-07.15	*
2.0 FSI (BVY)	Gasolina	FWD	1984	110	150	10.06-03.09	*
2.0 FSI (BVZ)	Gasolina	FWD	1984	110	150	10.06-03.09	*
2.0 TFSI (BWA)	Gasolina	FWD	1984	147	200	10.06-05.09	*
2.0 TFSI 4x4 (BWA)	Gasolina	4WD	1984	147	200	06.07-05.09	*
2.0 TFSI	Gasolina	FWD	1984	155	211	05.09-07.15	*
2.0 TFSI 4x4 (CCZB)	Gasolina	4WD	1984	155	211	05.09-07.15	*
1.6 LPG (CHGA)	Gasol./Gas (LPG)	FWD	1595	75	102	09.09-06.13	*
1.6 MultiFuel (BSE)	Gasol./Etanol	FWD	1595	75	102	10.06-11.10	*
1.6 MultiFuel (BSF)	Gasol./Etanol	FWD	1595	75	102	10.06-11.10	*
1.6 MultiFuel (CCSA)	Gasol./Etanol	FWD	1595	75	102	10.06-11.10	*
1.6 MultiFuel (CMXA)	Gasol./Etanol	FWD	1595	75	102	10.06-11.10	*
1.6 TDI (CAYB)	Diesel	FWD	1598	66	90	11.10-07.15	*
1.6 TDI (CAYC)	Diesel	FWD	1598	77	105	10.09-07.15	*
1.9 TDI (BXF)	Diesel	FWD	1896	66	90	08.09-12.10	*
1.9 TDI (BKC)	Diesel	FWD	1896	77	105	10.06-12.10	*
1.9 TDI (BLS)	Diesel	FWD	1896	77	105	10.06-12.10	*
1.9 TDI (BXE)	Diesel	FWD	1896	77	105	10.06-12.10	*
2.0 TDI (AZV)	Diesel	FWD	1968	100	136	11.06-03.09	*
2.0 TDI (BMM)	Diesel	FWD	1968	103	140	10.06-11.10	*
2.0 TDI 16V (BKD)	Diesel	FWD	1968	103	140	10.06-07.15	*
2.0 TDI 16V (CFHC)	Diesel	FWD	1968	103	140	10.06-07.15	*
2.0 TDI 16V 4x4 (CFHC)	Diesel	4WD	1968	103	140	10.10-07.15	*
2.0 TDI 4x4 (BMM)	Diesel	4WD	1968	103	140	06.07-11.10	*
2.0 TDI (BMN)	Diesel	FWD	1968	125	170	06.07-12.13	*
2.0 TDI (CEGA)	Diesel	FWD	1968	125	170	06.07-12.13	*
2.0 TDI 4x4 (BMN)	Diesel	4WD	1968	125	170	06.07-06.13	*
2.0 TDI 4x4 (CEGA)	Diesel	4WD	1968	125	170	06.07-06.13	*
2.0 TDI 4x4 (CFJA)	Diesel	4WD	1968	125	170	06.07-06.13	*
LEON (1M1) 11.99-06.06				**[CAMBIADO]:Fastback (Compact car-C Segment)**			
1.9 TDI (AXR)	Diesel	FWD	1896	74	100	10.05-06.06	*
LEON II (1P1) 05.05-12.13				**[CAMBIADO]:Fastback (Compact car-C Segment)**			
1.2 TSI (CBZB)	Gasolina	FWD	1197	77	105	02.10-12.12	*
1.4 16V (BXW)	Gasolina	FWD	1390	63	86	06.06-12.12	*
1.4 16V (CGGB)	Gasolina	FWD	1390	63	86	06.06-12.12	*
1.4 TSI (CAXC)	Gasolina	FWD	1390	92	125	11.07-12.12	*
1.6 (BSE)	Gasolina	FWD	1595	75	102	07.05-12.12	*
1.6 (BSF)	Gasolina	FWD	1595	75	102	07.05-12.12	*
1.6 (CCSA)	Gasolina	FWD	1595	75	102	07.05-12.12	*
1.8 TSI (BZB)	Gasolina	FWD	1798	118	160	06.07-12.12	*
1.8 TSI (CDAA)	Gasolina	FWD	1798	118	160	06.07-12.12	*
2.0 FSI (BLR)	Gasolina	FWD	1984	110	150	07.05-05.10	*
2.0 FSI (BLY)	Gasolina	FWD	1984	110	150	07.05-05.10	*
2.0 FSI (BVY)	Gasolina	FWD	1984	110	150	07.05-05.10	*
2.0 FSI (BVZ)	Gasolina	FWD	1984	110	150	07.05-05.10	*
2.0 TFSI (BWA1)	Gasolina	FWD	1984	136	185	09.05-05.06	*
2.0 TFSI (BWA)	Gasolina	FWD	1984	147	200	05.05-03.09	*
2.0 TFSI (CCZB)	Gasolina	FWD	1984	155	211	06.09-12.12	*

2.0 TFSI (BWJ)	Gasolina	FWD	1984	177	240	11.06-05.11	*
2.0 TFSI (CDLD)	Gasolina	FWD	1984	177	240	11.06-05.11	*
2.0 Cupra R (CDLA)	Gasolina	FWD	1984	195	265	09.09-12.12	*
1.6 LPG (CHGA)	Gasol./Gas (LPG)	FWD	1595	75	102	12.09-12.12	*
1.6 MultiFuel (BSE)	Gasol./Etanol	FWD	1595	75	102	07.05-08.13	*
1.6 MultiFuel (CCSA)	Gasol./Etanol	FWD	1595	75	102	07.05-08.13	*
1.6 MultiFuel (CMXA)	Gasol./Etanol	FWD	1595	75	102	07.05-08.13	*
1.6 TDI (CAYB)	Diesel	FWD	1598	66	90	11.10-12.12	*
1.6 TDI (CAYC)	Diesel	FWD	1598	77	105	02.10-12.12	*
1.9 TDI (BXF)	Diesel	FWD	1896	66	90	06.07-12.10	*
1.9 TDI (BKC)	Diesel	FWD	1896	77	105	07.05-12.10	*
1.9 TDI (BLS)	Diesel	FWD	1896	77	105	07.05-12.10	*
1.9 TDI (BXE)	Diesel	FWD	1896	77	105	07.05-12.10	*
1.9 TDI	Diesel	RWD	1896	81	110	10.05-12.12	*
2.0 TDI (AZV)	Diesel	FWD	1968	100	136	07.05-05.10	*
2.0 TDI (BMM)	Diesel	FWD	1968	103	140	10.05-10.10	*
2.0 TDI 16V (BKD)	Diesel	FWD	1968	103	140	07.05-12.12	*
2.0 TDI 16V (CFHC)	Diesel	FWD	1968	103	140	07.05-12.12	*
2.0 TDI 16V (CLCB)	Diesel	FWD	1968	103	140	07.05-12.12	*
2.0 TDI (BMN)	Diesel	FWD	1968	125	170	05.06-12.12	*
2.0 TDI (CEGA)	Diesel	FWD	1968	125	170	05.06-12.12	*
2.0 TDI (CFJA)	Diesel	FWD	1968	125	170	05.06-12.12	*
SKODA							
OCTAVIA II / LAURA (1Z3) 02.04-06.13				**[CAMBIADO]:Fastback (Compact car-C Segment)**			
1.2 TSI (CBZB)	Gasolina	FWD	1197	77	105	02.10-06.13	*
1.4 (BCA)	Gasolina	FWD	1390	55	75	05.04-05.06	*
1.4 (BUD)	Gasolina	FWD	1390	59	80	06.04-04.13	*
1.4 (CGGA)	Gasolina	FWD	1390	59	80	06.04-04.13	*
1.4 TSI (CAXA)	Gasolina	FWD	1390	90	122	11.08-06.13	*
1.6 (BGU)	Gasolina	FWD	1595	75	102	06.04-06.13	*
1.6 (BSE)	Gasolina	FWD	1595	75	102	06.04-06.13	*
1.6 (BSF)	Gasolina	FWD	1595	75	102	06.04-06.13	*
1.6 (CCSA)	Gasolina	FWD	1595	75	102	06.04-06.13	*
1.6 (CMXA)	Gasolina	FWD	1595	75	102	06.04-06.13	*
1.6 FSI (BLF)	Gasolina	FWD	1598	85	115	02.04-10.08	*
1.8 T	Gasolina	FWD	1781	110	150	09.05-12.08	*
1.8 TSI (CDAB)	Gasolina	FWD	1798	112	152	03.09-06.13	*
1.8 TSI (BZB)	Gasolina	FWD	1798	118	160	06.07-04.13	*
1.8 TSI (CDAA)	Gasolina	FWD	1798	118	160	06.07-04.13	*
2.0 FSI (BLR)	Gasolina	FWD	1984	110	150	11.04-10.08	*
2.0 FSI (BLY)	Gasolina	FWD	1984	110	150	11.04-10.08	*
2.0 FSI (BVY)	Gasolina	FWD	1984	110	150	11.04-10.08	*
2.0 FSI (BVZ)	Gasolina	FWD	1984	110	150	11.04-10.08	*
2.0 TFSI (BWA)	Gasolina	FWD	1984	147	200	10.05-02.13	*
2.0 TFSI (CCZA)	Gasolina	FWD	1984	147	200	10.05-02.13	*
1.6 LPG (BSE)	Gasol./Gas (LPG)	FWD	1595	75	102	08.09-11.12	*
1.6 LPG (CHGA)	Gasol./Gas (LPG)	FWD	1595	75	102	08.09-11.12	*
1.6 MultiFuel (CCSA)	Gasol./Etanol	FWD	1595	75	102	01.08-06.13	*

1.6 MultiFuel (CMXA)	Gasol./Etanol	FWD	1595	75	102	01.08-06.13	*
1.6 TDI (CAYC)	Diesel	FWD	1598	77	105	06.09-04.13	*
1.9 TDI (BJB)	Diesel	FWD	1896	77	105	06.04-12.10	*
1.9 TDI (BKC)	Diesel	FWD	1896	77	105	06.04-12.10	*
1.9 TDI (BLS)	Diesel	FWD	1896	77	105	06.04-12.10	*
1.9 TDI (BXE)	Diesel	FWD	1896	77	105	06.04-12.10	*
2.0 TDI (CFHF)	Diesel	FWD	1968	81	110	03.10-06.13	*
2.0 TDI (CLCA)	Diesel	FWD	1968	81	110	03.10-06.13	*
2.0 TDI (AZV)	Diesel	FWD	1968	100	136	02.04-05.10	*
2.0 TDI (BMM)	Diesel	FWD	1968	103	140	11.05-05.10	*
2.0 TDI 16V (BKD)	Diesel	FWD	1968	103	140	02.04-04.13	*
2.0 TDI 16V (CFHC)	Diesel	FWD	1968	103	140	02.04-04.13	*
2.0 TDI 16V (CLCB)	Diesel	FWD	1968	103	140	02.04-04.13	*
2.0 TDI RS (BMN)	Diesel	FWD	1968	125	170	04.06-02.13	*
2.0 TDI RS (CEGA)	Diesel	FWD	1968	125	170	04.06-02.13	*
OCTAVIA II Combi (1Z5) 02.04-06.13				**[CAMBIADO]:Break (Compact car-C Segment)**			
1.2 TSI (CBZB)	Gasolina	FWD	1197	77	105	02.10-04.13	*
1.4 (BCA)	Gasolina	FWD	1390	55	75	05.04-05.06	*
1.4 (BUD)	Gasolina	FWD	1390	59	80	05.06-06.13	*
1.4 (CGGA)	Gasolina	FWD	1390	59	80	05.06-06.13	*
1.4 TSI (CAXA)	Gasolina	FWD	1390	90	122	11.08-06.13	*
1.6 (BGU)	Gasolina	FWD	1595	75	102	09.04-06.13	*
1.6 (BSE)	Gasolina	FWD	1595	75	102	09.04-06.13	*
1.6 (BSF)	Gasolina	FWD	1595	75	102	09.04-06.13	*
1.6 (CCSA)	Gasolina	FWD	1595	75	102	09.04-06.13	*
1.6 (CMXA)	Gasolina	FWD	1595	75	102	09.04-06.13	*
1.6 FSI (BLF)	Gasolina	FWD	1598	85	115	02.04-10.08	*
1.8 TSI (CDAB)	Gasolina	FWD	1798	112	152	03.09-06.13	*
1.8 TSI 4x4 (CDAB)	Gasolina	4WD	1798	112	152	03.09-02.13	*
1.8 TSI (BZB)	Gasolina	FWD	1798	118	160	06.07-04.13	*
1.8 TSI (CDAA)	Gasolina	FWD	1798	118	160	06.07-04.13	*
1.8 TSI 4x4 (CDAA)	Gasolina	4WD	1798	118	160	11.08-02.13	*
2.0 FSI (BLR)	Gasolina	FWD	1984	110	150	11.04-10.08	*
2.0 FSI (BLY)	Gasolina	FWD	1984	110	150	11.04-10.08	*
2.0 FSI (BVY)	Gasolina	FWD	1984	110	150	11.04-10.08	*
2.0 FSI (BVZ)	Gasolina	FWD	1984	110	150	11.04-10.08	*
2.0 FSI 4x4 (BLX)	Gasolina	4WD	1984	110	150	11.04-04.09	*
2.0 FSI 4x4 (BLY)	Gasolina	4WD	1984	110	150	11.04-04.09	*
2.0 FSI 4x4 (BVX)	Gasolina	4WD	1984	110	150	11.04-04.09	*
2.0 TFSI (BWA)	Gasolina	FWD	1984	147	200	10.05-02.13	*
2.0 TFSI (CCZA)	Gasolina	FWD	1984	147	200	10.05-02.13	*
1.6 LPG (CHGA)	Gasol./Gas (LPG)	FWD	1595	75	102	08.09-11.12	*
1.6 MultiFuel (CCSA)	Gasol./Etanol	FWD	1595	75	102	01.08-06.13	*
1.6 MultiFuel (CMXA)	Gasol./Etanol	FWD	1595	75	102	01.08-06.13	*
1.6 TDI (CAYC)	Diesel	FWD	1598	77	105	06.09-04.13	*
1.6 TDI 4x4 (CAYC)	Diesel	4WD	1598	77	105	06.09-02.13	*
1.9 TDI (BJB)	Diesel	FWD	1896	77	105	09.04-12.10	*
1.9 TDI (BKC)	Diesel	FWD	1896	77	105	09.04-12.10	*
1.9 TDI (BLS)	Diesel	FWD	1896	77	105	09.04-12.10	*

1.9 TDI (BXE)	Diesel	FWD	1896	77	105	09.04-12.10	*
1.9 TDI 4x4 (BKC)	Diesel	4WD	1896	77	105	11.04-12.10	*
1.9 TDI 4x4 (BLS)	Diesel	4WD	1896	77	105	11.04-12.10	*
1.9 TDI 4x4 (BXE)	Diesel	4WD	1896	77	105	11.04-12.10	*
2.0 TDI (CFHF)	Diesel	FWD	1968	81	110	03.10-06.13	*
2.0 TDI (CLCA)	Diesel	FWD	1968	81	110	03.10-06.13	*
2.0 TDI 4x4 (CFHF)	Diesel	4WD	1968	81	110	05.11-02.13	*
2.0 TDI 16V (AZV)	Diesel	FWD	1968	100	136	02.04-05.10	*
2.0 TDI (BMM)	Diesel	FWD	1968	103	140	11.05-05.10	*
2.0 TDI 16V (BKD)	Diesel	FWD	1968	103	140	02.04-05.13	*
2.0 TDI 16V (CFHC)	Diesel	FWD	1968	103	140	02.04-05.13	*
2.0 TDI 16V (CLCB)	Diesel	FWD	1968	103	140	02.04-05.13	*
2.0 TDI 16V 4x4 (BKD)	Diesel	4WD	1968	103	140	05.10-02.13	*
2.0 TDI 16V 4x4 (CFHC)	Diesel	4WD	1968	103	140	05.10-02.13	*
2.0 TDI 16V 4x4 (CLCB)	Diesel	4WD	1968	103	140	05.10-02.13	*
2.0 TDI 4x4 (BMM)	Diesel	4WD	1968	103	140	07.06-05.10	*
2.0 TDI RS (BMN)	Diesel	FWD	1968	125	170	04.06-02.13	*
2.0 TDI RS (CEGA)	Diesel	FWD	1968	125	170	04.06-02.13	*
SUPERB II (3T5) 10.09-05.15				**[CAMBIADO]:Break (Executive car-E Segment)**			
1.4 TSI (CAXC)	Gasolina	FWD	1390	92	125	10.09-05.15	*
1.8 TSI (CDAB)	Gasolina	FWD	1798	112	152	10.09-05.15	*
1.8 TSI 4x4 (CDAB)	Gasolina	4WD	1798	112	152	10.09-05.15	*
1.8 TSI (CDAA)	Gasolina	FWD	1798	118	160	10.09-05.15	*
1.8 TSI 4x4 (CDAA)	Gasolina	4WD	1798	118	160	10.09-05.15	*
2.0 TFSI (CCZA)	Gasolina	FWD	1984	147	200	05.10-05.15	*
3.6 V6 4x4 (CDVA)	Gasolina	4WD	3597	191	260	10.09-05.15	*
1.6 TDI (CAYC)	Diesel	FWD	1598	77	105	09.10-05.15	*
1.9 TDI (BLS)	Diesel	FWD	1896	77	105	10.09-11.10	*
1.9 TDI (BXE)	Diesel	FWD	1896	77	105	10.09-11.10	*
2.0 TDI (BMP)	Diesel	FWD	1968	103	140	10.09-03.10	*
2.0 TDI 16V (BKD)	Diesel	FWD	1968	103	140	10.09-05.15	*
2.0 TDI 16V (CFFB)	Diesel	FWD	1968	103	140	10.09-05.15	*
2.0 TDI 16V (CLJA)	Diesel	FWD	1968	103	140	10.09-05.15	*
2.0 TDI 16V 4x4 (CFFB)	Diesel	4WD	1968	103	140	11.10-05.15	*
2.0 TDI (CBBB)	Diesel	FWD	1968	125	170	10.09-05.15	*
2.0 TDI (CFGB)	Diesel	FWD	1968	125	170	10.09-05.15	*
2.0 TDI 4x4 (CBBB)	Diesel	4WD	1968	125	170	10.09-05.15	*
2.0 TDI 4x4 (CFGB)	Diesel	4WD	1968	125	170	10.09-05.15	*
SUPERB II (3T4) 03.08-05.15				**[CAMBIADO]:Fastback (Executive car-E Segment)**			
1.4 TSI (CAXC)	Gasolina	FWD	1390	92	125	07.08-05.15	*
1.8 TSI (CDAB)	Gasolina	FWD	1798	112	152	03.09-05.15	*
1.8 TSI 4x4 (CDAB)	Gasolina	4WD	1798	112	152	03.09-05.15	*
1.8 TSI (BZB)	Gasolina	FWD	1798	118	160	03.08-05.15	*
1.8 TSI (CDAA)	Gasolina	FWD	1798	118	160	03.08-05.15	*
1.8 TSI 4x4 (CDAA)	Gasolina	4WD	1798	118	160	11.08-05.15	*
2.0 TFSI (CCZA)	Gasolina	FWD	1984	147	200	05.10-05.15	*
3.6 FSI 4x4 (CDVA)	Gasolina	4WD	3597	191	260	11.08-05.15	*
1.6 TDI (CAYC)	Diesel	FWD	1598	77	105	09.10-05.15	*
1.9 TDI (BLS)	Diesel	FWD	1896	77	105	03.08-11.10	*
1.9 TDI (BXE)	Diesel	FWD	1896	77	105	03.08-11.10	*

2.0 TDI (BMP)	Diesel	FWD	1968	103	140	03.08-05.10	*
2.0 TDI 16V (BKD)	Diesel	FWD	1968	103	140	01.09-05.15	*
2.0 TDI 16V (CFFB)	Diesel	FWD	1968	103	140	01.09-05.15	*
2.0 TDI 16V (CLJA)	Diesel	FWD	1968	103	140	01.09-05.15	*
2.0 TDI 16V 4x4 (CFFB)	Diesel	4WD	1968	103	140	11.10-05.15	*
2.0 TDI (CBBB)	Diesel	FWD	1968	125	170	07.08-05.15	*
2.0 TDI (CFGB)	Diesel	FWD	1968	125	170	07.08-05.15	*
2.0 TDI 4x4 (CBBB)	Diesel	4WD	1968	125	170	09.08-05.15	*
2.0 TDI 4x4 (CFGB)	Diesel	4WD	1968	125	170	09.08-05.15	*
SUPERB III (3V5) 03.15-				**[CAMBIADO]:Break (Executive car-E Segment)**			
1.4 TSI (CZCA)	Gasolina	FWD	1395	92	125	03.15-06.24	*
1.4 TSI (CZDA)	Gasolina	FWD	1395	110	150	03.15-06.24	*
1.4 TSI (CZEA)	Gasolina	FWD	1395	110	150	03.15-06.24	*
1.4 TSI 4x4 (CZEA)	Gasolina	4WD	1395	110	150	03.15-06.24	*
1.8 TSI (CJSA)	Gasolina	FWD	1798	132	180	03.15-06.24	*
1.8 TSI (CJSC)	Gasolina	FWD	1798	132	180	03.15-06.24	*
2.0 TSI (CHHB)	Gasolina	FWD	1984	162	220	03.15-06.24	*
2.0 TSI 4x4 (CJXA)	Gasolina	4WD	1984	206	280	03.15-06.24	*
2.0 TSI 4x4 (DNFE)	Gasolina	4WD	1984	206	280	03.15-06.24	*
1.6 TDI (DCXA)	Diesel	FWD	1598	88	120	03.15-06.24	*
1.6 TDI (DCZA)	Diesel	FWD	1598	88	120	03.15-06.24	*
2.0 TDI (CRLB)	Diesel	FWD	1968	110	150	03.15-06.24	*
2.0 TDI (DFEA)	Diesel	FWD	1968	110	150	03.15-06.24	*
2.0 TDI (DFGA)	Diesel	FWD	1968	110	150	03.15-06.24	*
2.0 TDI (DSRA)	Diesel	FWD	1968	110	150	03.15-06.24	*
2.0 TDI (DSRB)	Diesel	FWD	1968	110	150	03.15-06.24	*
2.0 TDI 4x4 (CRLB)	Diesel	4WD	1968	110	150	03.15-06.24	*
2.0 TDI 4x4 (DFEA)	Diesel	4WD	1968	110	150	03.15-06.24	*
2.0 TDI 4x4 (DFGA)	Diesel	4WD	1968	110	150	03.15-06.24	*
2.0 TDI (DDAA)	Diesel	FWD	1968	140	190	03.15-06.24	*
2.0 TDI (DFCA)	Diesel	FWD	1968	140	190	03.15-06.24	*
2.0 TDI (DFHA)	Diesel	FWD	1968	140	190	03.15-06.24	*
2.0 TDI 4x4 (DDAA)	Diesel	4WD	1968	140	190	03.15-06.24	*
2.0 TDI 4x4 (DFCA)	Diesel	4WD	1968	140	190	03.15-06.24	*
2.0 TDI 4x4 (DFHA)	Diesel	4WD	1968	140	190	03.15-06.24	*
SUPERB III (3V3) 03.15-				**[CAMBIADO]:Fastback (Executive car-E Segment)**			
1.4 TSI (CZCA)	Gasolina	FWD	1395	92	125	03.15-06.24	*
1.4 TSI (CZDA)	Gasolina	FWD	1395	110	150	03.15-06.24	*
1.4 TSI (CZEA)	Gasolina	FWD	1395	110	150	03.15-06.24	*
1.4 TSI 4x4 (CZEA)	Gasolina	4WD	1395	110	150	03.15-06.24	*
1.8 TSI (CJSA)	Gasolina	FWD	1798	132	180	03.15-06.24	*
1.8 TSI (CJSC)	Gasolina	FWD	1798	132	180	03.15-06.24	*
2.0 TSI (CHHB)	Gasolina	FWD	1984	162	220	03.15-06.24	*
2.0 TSI 4x4 (CJXA)	Gasolina	4WD	1984	206	280	03.15-06.24	*
2.0 TSI 4x4 (DNFE)	Gasolina	4WD	1984	206	280	03.15-06.24	*
1.6 TDI (DCXA)	Diesel	FWD	1598	88	120	03.15-06.24	*
1.6 TDI (DCZA)	Diesel	FWD	1598	88	120	03.15-06.24	*
2.0 TDI (CRLB)	Diesel	FWD	1968	110	150	03.15-06.24	*
2.0 TDI (DFEA)	Diesel	FWD	1968	110	150	03.15-06.24	*
2.0 TDI (DFGA)	Diesel	FWD	1968	110	150	03.15-06.24	*

2.0 TDI (DSRA)	Diesel	FWD	1968	110	150	03.15-06.24	*
2.0 TDI (DSRB)	Diesel	FWD	1968	110	150	03.15-06.24	*
2.0 TDI 4x4 (CRLB)	Diesel	4WD	1968	110	150	03.15-06.24	*
2.0 TDI 4x4 (DFEA)	Diesel	4WD	1968	110	150	03.15-06.24	*
2.0 TDI 4x4 (DFGA)	Diesel	4WD	1968	110	150	03.15-06.24	*
2.0 TDI (DDAA)	Diesel	FWD	1968	140	190	03.15-06.24	*
2.0 TDI (DFCA)	Diesel	FWD	1968	140	190	03.15-06.24	*
2.0 TDI (DFHA)	Diesel	FWD	1968	140	190	03.15-06.24	*
2.0 TDI 4x4 (DDAA)	Diesel	4WD	1968	140	190	03.15-06.24	*
2.0 TDI 4x4 (DFCA)	Diesel	4WD	1968	140	190	03.15-06.24	*
2.0 TDI 4x4 (DFHA)	Diesel	4WD	1968	140	190	03.15-06.24	*
YETI (5L) 05.09-						**SUV (Mini SUV-J Segment)**	
1.2 TSI (CBZB)	Gasolina	FWD	1197	77	105	09.09-05.15	*
1.2 TSI (CYVB)	Gasolina	FWD	1197	81	110	05.15-12.17	*
1.4 TSI (CAXA)	Gasolina	FWD	1390	90	122	06.10-05.15	*
1.4 TSI (CZCA)	Gasolina	FWD	1395	92	125	05.15-12.17	*
1.4 TSI 4x4 (CZDA)	Gasolina	4WD	1395	110	150	05.15-12.17	*
1.6 (CWVA)	Gasolina	FWD	1598	81	110	04.14-12.17	*
1.8 TSI 4x4 (CDAB)	Gasolina	4WD	1798	112	152	11.09-12.17	*
1.8 TSI 4x4 (CDAA)	Gasolina	4WD	1798	118	160	05.09-12.17	*
1.6 TDI (CAYC)	Diesel	FWD	1598	77	105	11.10-05.15	*
2.0 TDI (CFHA)	Diesel	FWD	1968	81	110	11.09-12.17	*
2.0 TDI (CLCA)	Diesel	FWD	1968	81	110	11.09-12.17	*
2.0 TDI (CUUA)	Diesel	FWD	1968	81	110	11.09-12.17	*
2.0 TDI (DFSA)	Diesel	FWD	1968	81	110	11.09-12.17	*
2.0 TDI 4x4 (CFHF)	Diesel	4WD	1968	81	110	11.09-12.17	*
2.0 TDI 4x4 (CUUA)	Diesel	4WD	1968	81	110	11.09-12.17	*
2.0 TDI 4x4 (DFSA)	Diesel	4WD	1968	81	110	11.09-12.17	*
2.0 TDI (CFHC)	Diesel	FWD	1968	103	140	11.11-12.17	*
2.0 TDI (CLCB)	Diesel	FWD	1968	103	140	11.11-12.17	*
2.0 TDI 4x4 (CBDB)	Diesel	4WD	1968	103	140	05.09-12.17	*
2.0 TDI 4x4 (CFHC)	Diesel	4WD	1968	103	140	05.09-12.17	*
2.0 TDI 4x4 (CLCB)	Diesel	4WD	1968	103	140	05.09-12.17	*
2.0 TDI (CUUB)	Diesel	FWD	1968	110	150	05.15-12.17	*
2.0 TDI (DFSB)	Diesel	FWD	1968	110	150	05.15-12.17	*
2.0 TDI 4x4 (CUUB)	Diesel	4WD	1968	110	150	05.15-12.17	*
2.0 TDI 4x4 (DFSB)	Diesel	4WD	1968	110	150	05.15-12.17	*
2.0 TDI 4x4 (CEGA)	Diesel	4WD	1968	125	170	11.09-05.15	*
2.0 TDI 4x4 (CFJA)	Diesel	4WD	1968	125	170	11.09-05.15	*
SKODA (SVW)							
OCTAVIA (913) 06.07-						**[CAMBIADO]:Fastback (Compact car-C Segment)**	
1.4 TSI	Gasolina	FWD	1390	96	131	08.09-	*
1.6	Gasolina	FWD	1598	77	105	06.07-12.17	*
1.6	Gasolina	FWD	1598	77	105	01.10-12.15	*
1.8 TSI	Gasolina	FWD	1798	118	160	06.07-03.14	*
2.0 TSI	Gasolina	FWD	1984	147	200	04.10-	*
YETI (0Y6, 0Y7) 11.13-						**Closed SUV (Mini SUV-J Segment)**	
1.6	Gasolina	FWD	1598	81	110	02.14-	*
VW							

LISTA DE APLICACIONES - BUYERS GUIDE

BEETLE (5C7, 5C8) 12.11-							Cabrío (Compact car-C Segment)
1.2 TSI (CBZB)	Gasolina	FWD	1197	77	105	12.11-07.19	*
1.4 TSI (CAVD)	Gasolina	FWD	1390	118	160	12.11-07.16	*
1.4 TSI (CNWA)	Gasolina	FWD	1390	118	160	12.11-07.16	*
1.4 TSI (CTHD)	Gasolina	FWD	1390	118	160	12.11-07.16	*
1.4 TSI (CTKA)	Gasolina	FWD	1390	118	160	12.11-07.16	*
1.4 TSI (CZDA)	Gasolina	FWD	1395	110	150	12.14-09.18	*
1.8 TSI	Gasolina	FWD	1798	125	170	12.13-	*
2.0 TFSI (CBFA)	Gasolina	FWD	1984	147	200	12.11-07.16	*
2.0 TFSI (CCTA)	Gasolina	FWD	1984	147	200	12.11-07.16	*
2.0 TFSI (CCZA)	Gasolina	FWD	1984	147	200	12.11-07.16	*
2.0 TSI (CPLA)	Gasolina	FWD	1984	155	210	12.12-07.19	*
2.0 TSI (CPPA)	Gasolina	FWD	1984	155	210	12.12-07.19	*
2.0 TSI (CULC)	Gasolina	FWD	1984	162	220	12.14-09.18	*
2.5 (CBTA)	Gasolina	FWD	2480	125	170	12.11-07.16	*
2.5 (CBUA)	Gasolina	FWD	2480	125	170	12.11-07.16	*
2.5 (CCCA)	Gasolina	FWD	2480	125	170	12.11-07.16	*
1.6 TDI (CAYC)	Diesel	FWD	1598	77	105	12.11-07.16	*
2.0 TDI (CUUA)	Diesel	FWD	1968	81	110	06.14-09.18	*
2.0 TDI (CFFB)	Diesel	FWD	1968	103	140	04.12-07.16	*
2.0 TDI (CJAA)	Diesel	FWD	1968	103	140	04.12-07.16	*
2.0 TDI (CUUB)	Diesel	FWD	1968	110	150	09.14-09.18	*
2.0 TDI (CVCA)	Diesel	FWD	1968	110	150	09.14-09.18	*
2.0 TDI (DELA)	Diesel	FWD	1968	110	150	09.14-09.18	*
BEETLE / NOVO FUSCA (5C1, 5C2) 04.11-							**[CAMBIADO]:Fastback (Compact car-C Segment)**
1.2 TSI (CBZB)	Gasolina	FWD	1197	77	105	07.11-07.19	*
1.4 TSI (CAVD)	Gasolina	FWD	1390	118	160	10.11-07.16	*
1.4 TSI (CNWA)	Gasolina	FWD	1390	118	160	10.11-07.16	*
1.4 TSI (CTHD)	Gasolina	FWD	1390	118	160	10.11-07.16	*
1.4 TSI (CTKA)	Gasolina	FWD	1390	118	160	10.11-07.16	*
2.0 TFSI (CBFA)	Gasolina	FWD	1984	147	200	04.11-07.16	*
2.0 TFSI (CCTA)	Gasolina	FWD	1984	147	200	04.11-07.16	*
2.0 TFSI (CCZA)	Gasolina	FWD	1984	147	200	04.11-07.16	*
2.0 TSI (CPLA)	Gasolina	FWD	1984	155	211	12.12-07.19	*
2.0 TSI (CPPA)	Gasolina	FWD	1984	155	211	12.12-07.19	*
2.0 TSI (CULC)	Gasolina	FWD	1984	162	220	12.14-09.18	*
2.5 (CBTA)	Gasolina	FWD	2480	125	170	04.11-07.19	*
2.5 (CBUA)	Gasolina	FWD	2480	125	170	04.11-07.19	*
2.5 (CCCA)	Gasolina	FWD	2480	125	170	04.11-07.19	*
1.6 TDI (CAYC)	Diesel	FWD	1598	77	105	10.11-07.16	*
2.0 TDI (CFFB)	Diesel	FWD	1968	103	140	04.11-07.16	*
2.0 TDI (CJAA)	Diesel	FWD	1968	103	140	04.11-07.16	*
CADDY III (2KA, 2KH, 2CA, 2CH) 03.04-03.16							**Furgoneta/MPV (LCVs-N1 Segment)**
1.0 TSI (CHZG)	Gasolina	FWD	999	75	102	11.15-09.20	*
1.0 TSI (DKRE)	Gasolina	FWD	999	75	102	11.15-09.20	*
1.2 TSI (CYVC)	Gasolina	FWD	1197	62	84	06.15-09.20	*
1.2 TSI (CBZA)	Gasolina	FWD	1197	63	86	09.10-05.15	*
1.2 TSI (CBZB)	Gasolina	FWD	1197	77	105	09.10-05.15	*
1.4 (BCA)	Gasolina	FWD	1390	55	75	03.04-05.06	*
1.4 (BUD)	Gasolina	FWD	1390	59	80	05.06-08.10	*

1.4 TSI (CZCB)	Gasolina	FWD	1395	92	125	05.15-09.20	*
1.6 (BGU)	Gasolina	FWD	1595	75	102	04.04-05.15	*
1.6 (BSE)	Gasolina	FWD	1595	75	102	04.04-05.15	*
1.6 (BSF)	Gasolina	FWD	1595	75	102	04.04-05.15	*
1.6 BiFuel (CHGA)	Gasol./Gas (LPG)	FWD	1595	75	102	05.11-05.15	*
1.4 TGI CNG (CPWA)	Gasol./Gas (CNG)	FWD	1395	81	110	06.15-09.20	*
1.6 TDI (CAYE)	Diesel	FWD	1598	55	75	08.10-05.15	*
1.6 TDI (CAYE)	Diesel	FWD	1598	55	75	05.15-11.17	*
1.6 TDI (CAYD)	Diesel	FWD	1598	75	102	08.10-05.15	*
1.6 TDI (CAYD)	Diesel	FWD	1598	75	102	05.15-09.20	*
1.9 TDI (BSU)	Diesel	FWD	1896	55	75	09.05-08.10	*
1.9 TDI (BJB)	Diesel	FWD	1896	77	105	04.04-08.10	*
1.9 TDI (BLS)	Diesel	FWD	1896	77	105	04.04-08.10	*
1.9 TDI 4motion (BLS)	Diesel	4WD	1896	77	105	11.08-08.10	*
2.0 SDI (BDJ)	Diesel	FWD	1968	51	70	03.04-08.10	*
2.0 SDI (BST)	Diesel	FWD	1968	51	70	03.04-08.10	*
2.0 TDI (CUUF)	Diesel	FWD	1968	55	75	05.15-09.20	*
2.0 TDI (DFSC)	Diesel	FWD	1968	55	75	05.15-09.20	*
2.0 TDI (DFSF)	Diesel	FWD	1968	55	75	05.15-09.20	*
2.0 TDI 4motion (DFSC)	Diesel	4WD	1968	55	75	11.15-07.19	*
2.0 TDI (CFHE)	Diesel	FWD	1968	62	85	11.10-05.15	*
2.0 TDI 4motion (CFHE)	Diesel	4WD	1968	62	85	12.10-05.15	*
2.0 TDI (CUUD)	Diesel	FWD	1968	75	102	05.15-09.20	*
2.0 TDI (DFSD)	Diesel	FWD	1968	75	102	05.15-09.20	*
2.0 TDI (CLCA)	Diesel	FWD	1968	81	110	08.10-05.15	*
2.0 TDI	Diesel	FWD	1968	81	110	09.15-	*
2.0 TDI 4motion (CFHF)	Diesel	4WD	1968	81	110	08.10-05.15	*
2.0 TDI 4motion (CFHF)	Diesel	4WD	1968	81	110	05.15-09.20	*
2.0 TDI 4motion (CLCA)	Diesel	4WD	1968	81	110	05.15-09.20	*
2.0 TDI 4motion (CUUE)	Diesel	4WD	1968	90	122	05.15-09.20	*
2.0 TDI 4motion (DFSE)	Diesel	4WD	1968	90	122	05.15-09.20	*
2.0 TDI (BMM)	Diesel	FWD	1968	103	140	09.07-08.10	*
2.0 TDI (CFHC)	Diesel	FWD	1968	103	140	05.15-09.20	*
2.0 TDI (CLCB)	Diesel	FWD	1968	103	140	05.15-09.20	*
2.0 TDI 16V (CFHC)	Diesel	FWD	1968	103	140	11.10-05.15	*
2.0 TDI 16V (CLCB)	Diesel	FWD	1968	103	140	11.10-05.15	*
2.0 TDI 16V 4motion (CFHC)	Diesel	4WD	1968	103	140	11.10-05.15	*
2.0 TDI 4motion (CFHC)	Diesel	4WD	1968	103	140	05.15-09.20	*
2.0 TDI (CUUB)	Diesel	FWD	1968	110	150	05.15-09.20	*
2.0 TDI (DFSB)	Diesel	FWD	1968	110	150	05.15-09.20	*
2.0 TDI 4motion (DFSB)	Diesel	4WD	1968	110	150	11.15-09.20	*
2.0 TDI (CFJA)	Diesel	FWD	1968	125	170	05.12-05.15	*
2.0 EcoFuel (BSX)	CNG	FWD	1984	80	109	04.06-05.15	*
CADDY III (2KB, 2KJ, 2CB, 2CJ) 03.04-03.16						**MPV (Mini MPV-M1 Segment)**	
1.0 TSI (CHZG)	Gasolina	FWD	999	75	102	11.15-09.20	*
1.0 TSI (DKRE)	Gasolina	FWD	999	75	102	11.15-09.20	*
1.2 TSI (CYVC)	Gasolina	FWD	1197	62	84	06.15-09.20	*
1.2 TSI (CBZA)	Gasolina	FWD	1197	63	86	09.10-05.15	*
1.2 TSI (CBZB)	Gasolina	FWD	1197	77	105	09.10-05.15	*
1.4 (BCA)	Gasolina	FWD	1390	55	75	03.04-05.06	*

1.4 (BUD)	Gasolina	FWD	1390	59	80	05.06-08.10	*
1.4 TSI (CZCB)	Gasolina	FWD	1395	92	125	05.15-09.20	*
1.6 (BGU)	Gasolina	FWD	1595	75	102	04.04-05.15	*
1.6 (BSE)	Gasolina	FWD	1595	75	102	04.04-05.15	*
1.6 (BSF)	Gasolina	FWD	1595	75	102	04.04-05.15	*
1.6 BiFuel (CHGA)	Gasol./Gas (LPG)	FWD	1595	75	102	05.11-05.15	*
1.4 TGI CNG (CPWA)	Gasol./Gas (CNG)	FWD	1395	81	110	06.15-09.20	*
1.6 TDI (CAYE)	Diesel	FWD	1598	55	75	08.10-05.15	*
1.6 TDI (CAYE)	Diesel	FWD	1598	55	75	05.15-11.17	*
1.6 TDI (CAYD)	Diesel	FWD	1598	75	102	08.10-05.15	*
1.6 TDI (CAYD)	Diesel	FWD	1598	75	102	05.15-09.20	*
1.9 D	Diesel	FWD	1896	48	65	10.05-06.09	*
1.9 TDI (BSU)	Diesel	FWD	1896	55	75	09.05-08.10	*
1.9 TDI (BJB)	Diesel	FWD	1896	77	105	04.04-08.10	*
1.9 TDI (BLS)	Diesel	FWD	1896	77	105	04.04-08.10	*
1.9 TDI 4motion (BLS)	Diesel	4WD	1896	77	105	05.08-08.10	*
2.0 SDI (BDJ)	Diesel	FWD	1968	51	70	03.04-08.10	*
2.0 SDI (BST)	Diesel	FWD	1968	51	70	03.04-08.10	*
2.0 TDI (CUUF)	Diesel	FWD	1968	55	75	05.15-09.20	*
2.0 TDI (DFSF)	Diesel	FWD	1968	55	75	05.15-09.20	*
2.0 TDI (CUUD)	Diesel	FWD	1968	75	102	05.15-09.20	*
2.0 TDI (DFSD)	Diesel	FWD	1968	75	102	05.15-09.20	*
2.0 TDI (CLCA)	Diesel	FWD	1968	81	110	08.10-05.15	*
2.0 TDI	Diesel	FWD	1968	81	110	09.15-	*
2.0 TDI 4motion (CFHF)	Diesel	4WD	1968	81	110	08.10-05.15	*
2.0 TDI 4motion (CFHF)	Diesel	4WD	1968	81	110	05.15-09.20	*
2.0 TDI 4motion (CLCA)	Diesel	4WD	1968	81	110	05.15-09.20	*
2.0 TDI 4motion (CUUE)	Diesel	4WD	1968	90	122	05.15-09.20	*
2.0 TDI 4motion (DFSE)	Diesel	4WD	1968	90	122	05.15-09.20	*
2.0 TDI (BMM)	Diesel	FWD	1968	103	140	09.07-08.10	*
2.0 TDI (CFHC)	Diesel	FWD	1968	103	140	05.15-09.20	*
2.0 TDI (CLCB)	Diesel	FWD	1968	103	140	05.15-09.20	*
2.0 TDI 16V (CFHC)	Diesel	FWD	1968	103	140	11.10-05.15	*
2.0 TDI 16V (CLCB)	Diesel	FWD	1968	103	140	11.10-05.15	*
2.0 TDI 16V 4motion (CFHC)	Diesel	4WD	1968	103	140	11.10-05.15	*
2.0 TDI 4motion (CFHC)	Diesel	4WD	1968	103	140	05.15-09.20	*
2.0 TDI (CUUB)	Diesel	FWD	1968	110	150	05.15-09.20	*
2.0 TDI (DFSB)	Diesel	FWD	1968	110	150	05.15-09.20	*
2.0 TDI 4motion (DFSB)	Diesel	4WD	1968	110	150	11.15-09.20	*
2.0 TDI (CFJA)	Diesel	FWD	1968	125	170	05.12-05.15	*
2.0 EcoFuel (BSX)	CNG	FWD	1984	80	109	04.06-05.15	*
CADDY III ALLTRACK (SAA) 05.15-				**Furgoneta/MPV (LCVs-N1 Segment)**			
1.0 TSI (CHZG)	Gasolina	FWD	999	75	102	11.15-09.20	*
1.2 TSI (CYVC)	Gasolina	FWD	1197	62	84	06.15-09.20	*
1.4 TSI (CZCB)	Gasolina	FWD	1395	92	125	05.15-09.20	*
1.4 TGI CNG (CPWA)	Gasol./Gas (CNG)	FWD	1395	81	110	06.15-09.20	*
2.0 TDI (CUUF)	Diesel	FWD	1968	55	75	05.15-09.20	*
2.0 TDI (DFSC)	Diesel	FWD	1968	55	75	05.15-09.20	*

2.0 TDI (DFSF)	Diesel	FWD	1968	55	75	05.15-09.20	*
2.0 TDI (CUUD)	Diesel	FWD	1968	75	102	05.15-09.20	*
2.0 TDI (DFSD)	Diesel	FWD	1968	75	102	05.15-09.20	*
2.0 TDI 4motion (CUUE)	Diesel	4WD	1968	90	122	05.15-09.20	*
2.0 TDI 4motion (DFSE)	Diesel	4WD	1968	90	122	05.15-09.20	*
2.0 TDI (CUUB)	Diesel	FWD	1968	110	150	05.15-09.20	*
2.0 TDI (DFSB)	Diesel	FWD	1968	110	150	05.15-09.20	*
2.0 TDI 4motion (DFSB)	Diesel	4WD	1968	110	150	11.15-09.20	*
CADDY III ALLTRACK (SAB) 05.15-						**MPV (Mini MPV-M1 Segment)**	
1.0 TSI (CHZG)	Gasolina	FWD	999	75	102	11.15-09.20	*
1.2 TSI (CYVC)	Gasolina	FWD	1197	62	84	06.15-09.20	*
1.4 TSI (CZCB)	Gasolina	FWD	1395	92	125	05.15-09.20	*
1.4 TGI CNG (CPWA)	Gasol./Gas (CNG)	FWD	1395	81	110	06.15-09.20	*
2.0 TDI (CUUF)	Diesel	FWD	1968	55	75	05.15-09.20	*
2.0 TDI (DFSF)	Diesel	FWD	1968	55	75	05.15-09.20	*
2.0 TDI (CUUD)	Diesel	FWD	1968	75	102	05.15-09.20	*
2.0 TDI (DFSD)	Diesel	FWD	1968	75	102	05.15-09.20	*
2.0 TDI 4motion (CUUE)	Diesel	4WD	1968	90	122	05.15-09.20	*
2.0 TDI 4motion (DFSE)	Diesel	4WD	1968	90	122	05.15-09.20	*
2.0 TDI (CUUB)	Diesel	FWD	1968	110	150	05.15-09.20	*
2.0 TDI (DFSB)	Diesel	FWD	1968	110	150	05.15-09.20	*
2.0 TDI 4motion (DFSB)	Diesel	4WD	1968	110	150	11.15-09.20	*
EOS (1F7, 1F8) 03.06-08.15						**Cabrío (Compact car-C Segment)**	
1.4 TSI (CAXA)	Gasolina	FWD	1390	90	122	11.07-08.15	*
1.4 TSI	Gasolina	FWD	1390	92	125	11.13-	*
1.4 TSI (CAVD)	Gasolina	FWD	1390	118	160	05.08-08.15	*
1.4 TSI (CTHD)	Gasolina	FWD	1390	118	160	05.08-08.15	*
1.4 TSI	Gasolina	FWD	1395	110	150	11.13-	*
1.6 FSI (BLF)	Gasolina	FWD	1598	85	115	06.06-05.08	*
2.0 FSI (BVY)	Gasolina	FWD	1984	110	150	03.06-05.08	*
2.0 FSI (BVZ)	Gasolina	FWD	1984	110	150	03.06-05.08	*
2.0 TFSI (BPY)	Gasolina	FWD	1984	147	200	03.06-08.15	*
2.0 TFSI (BWA)	Gasolina	FWD	1984	147	200	03.06-08.15	*
2.0 TFSI (CAWB)	Gasolina	FWD	1984	147	200	03.06-08.15	*
2.0 TFSI (CBFA)	Gasolina	FWD	1984	147	200	03.06-08.15	*
2.0 TFSI (CCTA)	Gasolina	FWD	1984	147	200	03.06-08.15	*
2.0 TFSI (CCZA)	Gasolina	FWD	1984	147	200	03.06-08.15	*
2.0 TSI (CCZB)	Gasolina	FWD	1984	155	210	11.09-08.15	*
2.0 TFSI	Gasolina	FWD	1984	162	220	11.13-08.15	*
3.2 V6 (BUB)	Gasolina	FWD	3189	184	250	06.06-05.09	*
3.2 V6 (CBRA)	Gasolina	FWD	3189	184	250	06.06-05.09	*
3.6 V6 (CDVA)	Gasolina	FWD	3597	191	260	05.09-11.10	*
2.0 TDI (CFFA)	Diesel	FWD	1968	100	136	11.10-08.15	*
2.0 TDI (BMM)	Diesel	FWD	1968	103	140	06.06-05.08	*
2.0 TDI 16V (CBAB)	Diesel	FWD	1968	103	140	05.08-08.15	*
2.0 TDI 16V (CFFB)	Diesel	FWD	1968	103	140	05.08-08.15	*
GOLF VI / JETTA VI (5K1) 10.08-12.14						**[CAMBIADO]:Fastback (Compact car-C Segment)**	
1.2 TSI (CBZA)	Gasolina	FWD	1197	63	86	05.10-11.12	*
1.2 TSI (CBZB)	Gasolina	FWD	1197	77	105	11.08-11.12	*

1.4 (CGGA)	Gasolina	FWD	1390	59	80	10.08-11.12	*
1.4 TSI (CAXA)	Gasolina	FWD	1390	90	122	10.08-11.12	*
1.4 TSI (CAVD)	Gasolina	FWD	1390	118	160	10.08-11.12	*
1.4 TSI (CNWA)	Gasolina	FWD	1390	118	160	10.08-11.12	*
1.4 TSI (CTHD)	Gasolina	FWD	1390	118	160	10.08-11.12	*
1.6 (BSE)	Gasolina	FWD	1595	75	102	10.08-11.12	*
1.6 (BSF)	Gasolina	FWD	1595	75	102	10.08-11.12	*
1.6 (CCSA)	Gasolina	FWD	1595	75	102	10.08-11.12	*
1.6 (CMXA)	Gasolina	FWD	1595	75	102	10.08-11.12	*
1.8 TSI (CDAA)	Gasolina	FWD	1798	118	160	06.09-01.11	*
2.0 Flex	Gasolina	FWD	1984	88	120	10.08-	*
2.0 GTI (CBFA)	Gasolina	FWD	1984	147	200	06.09-11.13	*
2.0 GTI (CCTA)	Gasolina	FWD	1984	147	200	06.09-11.13	*
2.0 GTI (CCZA)	Gasolina	FWD	1984	147	200	06.09-11.13	*
2.0 GTI (CCZB)	Gasolina	FWD	1984	155	210	04.09-11.12	*
2.0 GTI (CDLG)	Gasolina	FWD	1984	173	235	05.11-11.12	*
2.0 R 4motion (CDLC)	Gasolina	4WD	1984	188	256	11.09-11.13	*
2.0 R 4motion (CRZA)	Gasolina	4WD	1984	188	256	11.09-11.13	*
2.0 R 4motion (CDLA)	Gasolina	4WD	1984	195	265	11.09-05.11	*
2.0 R 4motion (CDLF)	Gasolina	4WD	1984	199	270	11.09-11.12	*
2.5 (CBTA)	Gasolina	FWD	2480	125	170	07.09-05.13	*
2.5 (CBUA)	Gasolina	FWD	2480	125	170	07.09-05.13	*
1.6 BiFuel (CHGA)	Gasol./Gas (LPG)	FWD	1595	75	102	03.09-11.12	*
1.6 MultiFuel (CCSA)	Gasol./Etanol	FWD	1595	75	102	10.08-11.12	*
1.6 MultiFuel (CMXA)	Gasol./Etanol	FWD	1595	75	102	10.08-11.12	*
1.6 TDI (CAYB)	Diesel	FWD	1598	66	90	02.09-11.12	*
1.6 TDI (CAYC)	Diesel	FWD	1598	77	105	02.09-11.12	*
2.0 TDI (CBDC)	Diesel	FWD	1968	81	110	10.08-11.12	*
2.0 TDI (CLCA)	Diesel	FWD	1968	81	110	10.08-11.12	*
2.0 TDI (CBAA)	Diesel	FWD	1968	100	136	10.08-11.12	*
2.0 TDI (CFFA)	Diesel	FWD	1968	100	136	10.08-11.12	*
2.0 TDI (CBAB)	Diesel	FWD	1968	103	140	10.08-05.13	*
2.0 TDI (CFFB)	Diesel	FWD	1968	103	140	10.08-05.13	*
2.0 TDI (CJAA)	Diesel	FWD	1968	103	140	10.08-05.13	*
2.0 TDI 4motion (CBAB)	Diesel	4WD	1968	103	140	05.09-11.12	*
2.0 TDI 4motion (CFFB)	Diesel	4WD	1968	103	140	05.09-11.12	*
2.0 TDI (CBBB)	Diesel	FWD	1968	125	170	04.09-11.12	*
2.0 TDI (CFGB)	Diesel	FWD	1968	125	170	04.09-11.12	*
GOLF VI / JETTA VI (517) 03.11-				**Cabrío (Compact car-C Segment)**			
1.2 TSI (CBZB)	Gasolina	FWD	1197	77	105	03.11-05.16	*
1.2 TSI 16V (CJZA)	Gasolina	FWD	1197	77	105	11.13-05.16	*
1.2 TSI 16V (CYVD)	Gasolina	FWD	1197	77	105	11.13-05.16	*
1.4 TSI (CAXA)	Gasolina	FWD	1390	90	122	11.11-05.16	*
1.4 TSI (CAVD)	Gasolina	FWD	1390	118	160	03.11-05.16	*
1.4 TSI (CNWA)	Gasolina	FWD	1390	118	160	03.11-05.16	*
1.4 TSI (CTHD)	Gasolina	FWD	1390	118	160	03.11-05.16	*
1.4 TSI (CTKA)	Gasolina	FWD	1390	118	160	03.11-05.16	*
1.4 TSI (CXSB)	Gasolina	FWD	1395	92	125	11.13-05.16	*
1.4 TSI (CZCA)	Gasolina	FWD	1395	92	125	11.13-05.16	*
1.4 TSI (CHPB)	Gasolina	FWD	1395	110	150	11.13-05.16	*

1.4 TSI (CZDA)	Gasolina	FWD	1395	110	150	11.13-05.16	*
2.0 GTI (CCZB)	Gasolina	FWD	1984	155	211	05.12-05.16	*
2.0 TSI (CULC)	Gasolina	FWD	1984	162	220	11.13-05.16	*
2.0 R (CDLA)	Gasolina	FWD	1984	195	265	01.13-05.16	*
1.6 TDI (CAYC)	Diesel	FWD	1598	77	105	03.11-05.16	*
2.0 TDI (CUUA)	Diesel	FWD	1968	81	110	11.13-05.16	*
2.0 TDI (CFHC)	Diesel	FWD	1968	103	140	11.11-05.16	*
2.0 TDI (CUUB)	Diesel	FWD	1968	110	150	11.13-05.16	*
GOLF VI / JETTA VI (5K1) 10.08-11.12				**Furgón/hatchback (Compact car-C Segment)**			
1.2 TSI (CBZA)	Gasolina	FWD	1197	63	86	05.10-11.12	*
1.2 TSI (CBZB)	Gasolina	FWD	1197	77	105	11.09-08.14	*
1.2 TSi BlueMotion (CBZB)	Gasolina	FWD	1197	77	105	05.09-11.12	*
1.4 TSI (CAXA)	Gasolina	FWD	1390	90	122	01.09-08.14	*
TSi (CAXA)	Gasolina	FWD	1390	90	122	10.08-11.12	*
1.4 TSI (CAVD)	Gasolina	FWD	1390	118	160	10.08-11.12	*
1.4 TSI (CAVD)	Gasolina	FWD	1390	118	160	01.09-09.12	*
2.0 GTI (CCZB)	Gasolina	FWD	1984	155	211	02.09-11.12	*
2.0 TSi R 4motion (CDLF)	Gasolina	4WD	1984	199	271	11.09-11.12	*
1.6 TDI (CAYB)	Diesel	FWD	1598	66	90	02.09-11.12	*
1.6 TDI (CAYB)	Diesel	FWD	1598	66	90	02.09-08.14	*
1.6 TDI (CAYC)	Diesel	FWD	1598	77	105	02.09-08.14	*
1.6 TDi BlueMotion (CAYC)	Diesel	FWD	1598	77	105	05.09-11.12	*
2.0 TDI (CFFB)	Diesel	FWD	1968	103	140	09.09-11.12	*
2.0 TDI (CJAA)	Diesel	FWD	1968	103	140	09.09-11.12	*
2.0 TDI (CFHC)	Diesel	FWD	1968	103	140	11.09-08.14	*
2.0 TDI (CFGB)	Diesel	FWD	1968	125	170	05.10-11.12	*
GOLF VI VAN Variant / JETTA VI (AJ5) 07.09-05.14				**[CAMBIADO]:Furgón/Break (Compact car-C Segment)**			
1.2 TSI (CBZB)	Gasolina	FWD	1197	77	105	09.09-05.14	*
1.4 TSI (CAXA)	Gasolina	FWD	1390	90	122	07.09-05.14	*
1.4 TSI (CAVD)	Gasolina	FWD	1390	118	160	07.09-10.12	*
1.6 TDI (CAYB)	Diesel	FWD	1598	66	90	12.09-10.12	*
1.6 TDi BlueMotion (CAYC)	Diesel	FWD	1598	77	105	07.09-05.14	*
2.0 TDI (CBDB)	Diesel	FWD	1968	103	140	07.09-05.14	*
2.0 TDI (CFHC)	Diesel	FWD	1968	103	140	07.09-05.14	*
GOLF VI Variant / JETTA VI (AJ5) 07.09-07.14				**[CAMBIADO]:Break (Compact car-C Segment)**			
1.2 TSI (CBZA)	Gasolina	FWD	1197	63	86	07.10-07.13	*
1.2 TSI (CBZB)	Gasolina	FWD	1197	77	105	07.09-07.13	*
1.4 (BUD)	Gasolina	FWD	1390	59	80	07.09-07.13	*
1.4 (CGGA)	Gasolina	FWD	1390	59	80	07.09-07.13	*
1.4 TSI (CAXA)	Gasolina	FWD	1390	90	122	07.09-07.13	*
1.4 TSI (CAVD)	Gasolina	FWD	1390	118	160	07.09-07.13	*
1.4 TSI (CNWA)	Gasolina	FWD	1390	118	160	07.09-07.13	*
1.4 TSI (CTHD)	Gasolina	FWD	1390	118	160	07.09-07.13	*
1.4 TSI (CTKA)	Gasolina	FWD	1390	118	160	07.09-07.13	*
1.6 (BSE)	Gasolina	FWD	1595	75	102	07.09-07.13	*
1.6 (BSF)	Gasolina	FWD	1595	75	102	07.09-07.13	*
1.6 (CCSA)	Gasolina	FWD	1595	75	102	07.09-07.13	*
2.0 TFSI (CCZA)	Gasolina	FWD	1984	147	200	07.09-07.13	*
2.5	Gasolina	FWD	2480	125	170	07.09-	*

1.6 BiFuel (BSF)		Gasol./Gas (LPG)	FWD	1595	75	102	07.09-12.10	*
1.6 MultiFuel (CMXA)		Gasol./Etanol	FWD	1595	75	102	07.10-07.13	*
1.6 TDI (CAYB)		Diesel	FWD	1598	66	90	12.09-07.13	*
1.6 TDI (CAYC)		Diesel	FWD	1598	77	105	07.09-07.13	*
1.6 TDI 4motion (CAYC)		Diesel	4WD	1598	77	105	07.09-07.13	*
2.0 TDI (CLCA)		Diesel	FWD	1968	81	110	01.10-07.13	*
2.0 TDI (CBDA)		Diesel	FWD	1968	100	136	07.09-07.13	*
2.0 TDI (CFHB)		Diesel	FWD	1968	100	136	07.09-07.13	*
2.0 TDI (CBDB)		Diesel	FWD	1968	103	140	07.09-07.13	*
2.0 TDI (CFHC)		Diesel	FWD	1968	103	140	07.09-07.13	*
2.0 TDI (CJAA)		Diesel	FWD	1968	103	140	07.09-07.13	*
2.0 TDI		Diesel	RWD	1968	103	140	07.09-07.13	*
GOLF VII / JETTA VII (5G1, BQ1, BE1, BE2) 08.12-							**[CAMBIADO]:Fastback (Compact car-C Segment)**	
1.2 TSI (CJZB)		Gasolina	FWD	1197	63	86	08.12-03.17	*
1.2 TSI (CYVA)		Gasolina	FWD	1197	63	86	08.12-03.17	*
1.2 TSI (CJZA)		Gasolina	FWD	1197	77	105	11.12-03.17	*
1.2 TSI (CYVB)		Gasolina	FWD	1197	81	110	04.14-03.17	*
1.4 TSI (CMBA)		Gasolina	FWD	1395	90	122	11.12-03.17	*
1.4 TSI (CXSA)		Gasolina	FWD	1395	90	122	11.12-03.17	*
1.4 TSI (CZCA)		Gasolina	FWD	1395	92	125	05.14-08.20	*
1.4 TSI (CHPA)		Gasolina	FWD	1395	103	140	08.12-07.17	*
1.4 TSI (CPTA)		Gasolina	FWD	1395	103	140	08.12-07.17	*
1.4 TSI (CHPB)		Gasolina	FWD	1395	110	150	05.14-03.21	*
1.4 TSI (CZDA)		Gasolina	FWD	1395	110	150	05.14-03.21	*
1.4 TSI (CZEA)		Gasolina	FWD	1395	110	150	05.14-03.21	*
1.4 TSI (DGXA)		Gasolina	FWD	1395	110	150	05.14-03.21	*
1.6 (CWVA)		Gasolina	FWD	1598	81	110	05.14-07.17	*
2.0 GTI (CNTA)		Gasolina	FWD	1984	155	210	11.13-07.17	*
2.0 GTI (CXCA)		Gasolina	FWD	1984	155	210	11.13-07.17	*
2.0 GTI (CHHB)		Gasolina	FWD	1984	162	220	04.13-08.20	*
2.0 GTI (CNTC)		Gasolina	FWD	1984	162	220	04.13-08.20	*
2.0 GTI (CXCB)		Gasolina	FWD	1984	162	220	04.13-08.20	*
2.0 GTI (CXDA)		Gasolina	FWD	1984	162	220	04.13-08.20	*
2.0 GTI (CHHA)		Gasolina	FWD	1984	169	230	04.13-08.20	*
2.0 GTI (CXDB)		Gasolina	FWD	1984	169	230	04.13-08.20	*
2.0 GTI Clubsport (CJXE)		Gasolina	FWD	1984	195	265	02.16-03.17	*
2.0 R 4motion (CJXB)		Gasolina	4WD	1984	206	280	11.13-03.17	*
2.0 R		Gasolina	FWD	1984	213	290	11.13-	*
2.0 R 4motion (CYFB)		Gasolina	4WD	1984	215	292	11.14-07.19	*
2.0 R 4motion (DJJA)		Gasolina	4WD	1984	215	292	11.14-07.19	*
2.0 R 4motion (DLRA)		Gasolina	4WD	1984	215	292	11.14-07.19	*
2.0 R 4motion (CJXC)		Gasolina	4WD	1984	221	300	11.13-08.20	*
2.0 R 4motion (DNUE)		Gasolina	4WD	1984	221	300	11.13-08.20	*
2.0 GTI Clubsport S (CJXG)		Gasolina	FWD	1984	228	310	09.16-03.17	*
1.4 TGI CNG (CPWA)		Gasol./Gas (CNG)	FWD	1395	81	110	06.13-07.18	*
1.4 TGI CNG (CZBA)		Gasol./Gas (CNG)	FWD	1395	81	110	06.13-07.18	*
1.4 TSI MultiFuel (CPVA)		Gasol./Etanol	FWD	1395	90	122	11.12-03.17	*

1.4 TSI MultiFuel (CPVB)	Gasol./Etanol	FWD	1395	92	125	12.13-07.18	*
1.4 GTE Hybrid (CUKB)	Gasol./elék.	FWD	1395	150	204	05.14-08.20	*
1.6 TDI (CLHB)	Diesel	FWD	1598	66	90	04.13-07.18	*
1.6 TDI (CRKA)	Diesel	FWD	1598	66	90	04.13-07.18	*
1.6 TDI (CXXA)	Diesel	FWD	1598	66	90	04.13-07.18	*
1.6 TDI (DDYB)	Diesel	FWD	1598	66	90	04.13-07.18	*
1.6 TDI (CLHA)	Diesel	FWD	1598	77	105	08.12-03.17	*
1.6 TDI 4motion (CLHA)	Diesel	4WD	1598	77	105	11.12-03.17	*
1.6 TDI (CRKB)	Diesel	FWD	1598	81	110	01.13-03.17	*
1.6 TDI (CXXB)	Diesel	FWD	1598	81	110	01.13-03.17	*
1.6 TDI (DBKA)	Diesel	FWD	1598	81	110	01.13-03.17	*
1.6 TDI 4motion (CRKB)	Diesel	4WD	1598	81	110	01.13-03.17	*
1.6 TDI 4motion (CXXB)	Diesel	4WD	1598	81	110	01.13-03.17	*
2.0 TDI (CRLD)	Diesel	FWD	1968	81	110	11.12-08.20	*
2.0 TDI (CRVA)	Diesel	FWD	1968	81	110	11.12-08.20	*
2.0 TDI (CYKB)	Diesel	FWD	1968	81	110	11.12-08.20	*
2.0 TDI (DCYB)	Diesel	FWD	1968	81	110	11.12-08.20	*
2.0 TDI (DEJB)	Diesel	FWD	1968	81	110	11.12-08.20	*
2.0 TDI (DFGB)	Diesel	FWD	1968	81	110	11.12-08.20	*
2.0 TDI (CRBB)	Diesel	FWD	1968	105	143	08.12-08.20	*
2.0 TDI (CRVC)	Diesel	FWD	1968	105	143	08.12-08.20	*
2.0 TDI (CRBC)	Diesel	FWD	1968	110	150	08.12-08.20	*
2.0 TDI (CRLB)	Diesel	FWD	1968	110	150	08.12-08.20	*
2.0 TDI (CRMB)	Diesel	FWD	1968	110	150	08.12-08.20	*
2.0 TDI (CRUA)	Diesel	FWD	1968	110	150	08.12-08.20	*
2.0 TDI (DCYA)	Diesel	FWD	1968	110	150	08.12-08.20	*
2.0 TDI (DEJA)	Diesel	FWD	1968	110	150	08.12-08.20	*
2.0 TDI (DFGA)	Diesel	FWD	1968	110	150	08.12-08.20	*
2.0 TDI 4motion (CKFC)	Diesel	4WD	1968	110	150	11.12-08.20	*
2.0 TDI 4motion (CRBC)	Diesel	4WD	1968	110	150	11.12-08.20	*
2.0 TDI 4motion (CRLB)	Diesel	4WD	1968	110	150	11.12-08.20	*
2.0 TDI 4motion (CRMB)	Diesel	4WD	1968	110	150	11.12-08.20	*
2.0 TDI 4motion (DCYA)	Diesel	4WD	1968	110	150	11.12-08.20	*
2.0 GTD	Diesel	FWD	1968	130	177	11.16-	*
2.0 GTD (CUNA)	Diesel	FWD	1968	135	184	04.13-08.20	*
2.0 GTD (DGCA)	Diesel	FWD	1968	135	184	04.13-08.20	*
2.0 GTD (DJGA)	Diesel	FWD	1968	135	184	04.13-08.20	*
GOLF VII / JETTA VII (5G1) 08.12-				**Furgón/hatchback (Compact car-C Segment)**			
1.2 TSi BlueMotion (CJZB)	Gasolina	FWD	1197	63	86	08.12-03.17	*
1.2 TSi BlueMotion (CJZA)	Gasolina	FWD	1197	77	105	11.12-03.17	*
1.4 TSi BlueMotion (CXSA)	Gasolina	FWD	1395	90	122	05.13-03.17	*
1.4 TSi BlueMotion (CHPA)	Gasolina	FWD	1395	103	140	08.12-03.17	*
2.0 GTI (CHHB)	Gasolina	FWD	1984	162	220	04.13-03.17	*
2.0 GTI (CHHA)	Gasolina	FWD	1984	169	230	04.15-03.17	*
1.6 TDi BlueMotion (CRKA)	Diesel	FWD	1598	66	90	04.13-03.17	*
1.6 TDi BlueMotion (CLHA)	Diesel	FWD	1598	77	105	08.12-03.17	*
1.6 TDi BlueMotion (CRKB)	Diesel	FWD	1598	81	110	11.13-03.17	*
1.6 TDi BlueMotion (CXXB)	Diesel	FWD	1598	81	110	11.13-03.17	*
2.0 TDI BlueMotion	Diesel	FWD	1968	110	150	05.13-05.14	*
2.0 TDi BlueMotion 4motion (CRBC)	Diesel	4WD	1968	110	150	05.13-05.14	*

2.0 GTD (CUNA)	Diesel	FWD	1968	135	184	04.13-03.17	*
GOLF VII ALLTRACK Variant (BA5, BV5) 12.14-				**[CAMBIADO]:Break (Compact car-C Segment)**			
1.8 TSI 4motion (CJSB)	Gasolina	4WD	1798	132	180	12.14-08.20	*
1.6 TDI 4motion (CRKB)	Diesel	4WD	1598	81	110	12.14-03.17	*
1.6 TDI 4motion (CXXB)	Diesel	4WD	1598	81	110	12.14-03.17	*
2.0 TDI 4motion (CRBC)	Diesel	4WD	1968	110	150	12.14-08.20	*
2.0 TDI 4motion (CRLB)	Diesel	4WD	1968	110	150	12.14-08.20	*
2.0 TDI 4motion (DCYA)	Diesel	4WD	1968	110	150	12.14-08.20	*
2.0 TDI 4motion (CUNA)	Diesel	4WD	1968	135	184	12.14-08.20	*
2.0 TDI 4motion (DGCA)	Diesel	4WD	1968	135	184	12.14-08.20	*
2.0 TDI 4motion (DJGA)	Diesel	4WD	1968	135	184	12.14-08.20	*
GOLF VII VAN Variant / JETTA VII (BA5) 04.13-03.17				**[CAMBIADO]:Furgón/Break (Compact car-C Segment)**			
1.2 TSi BlueMotion (CJZB)	Gasolina	FWD	1197	63	86	05.13-03.17	*
1.2 TSi BlueMotion (CYVA)	Gasolina	FWD	1197	63	86	05.13-03.17	*
1.2 TSi BlueMotion (CJZA)	Gasolina	FWD	1197	77	105	04.13-03.17	*
1.4 TSi BlueMotion (CXSA)	Gasolina	FWD	1395	90	122	05.13-03.17	*
1.4 TSi BlueMotion (CHPA)	Gasolina	FWD	1395	103	140	05.13-03.17	*
1.6 TDi BlueMotion (CLHB)	Diesel	FWD	1598	66	90	05.13-03.17	*
1.6 TDi BlueMotion (CRKA)	Diesel	FWD	1598	66	90	05.13-03.17	*
1.6 TDi BlueMotion (CXXA)	Diesel	FWD	1598	66	90	05.13-03.17	*
1.6 TDi BlueMotion (CLHA)	Diesel	FWD	1598	77	105	05.13-03.17	*
1.6 TDi BlueMotion 4motion (CLHA)	Diesel	4WD	1598	77	105	05.13-03.17	*
1.6 TDi BlueMotion (CRKB)	Diesel	FWD	1598	81	110	05.13-03.17	*
2.0 TDI BlueMotion (CRBC)	Diesel	FWD	1968	110	150	04.13-03.17	*
2.0 TDI BlueMotion (CRLB)	Diesel	FWD	1968	110	150	04.13-03.17	*
2.0 TDi BlueMotion 4motion (CRBC)	Diesel	4WD	1968	110	150	04.13-03.17	*
2.0 TDi BlueMotion 4motion (CRLB)	Diesel	4WD	1968	110	150	04.13-03.17	*
GOLF VII Variant / JETTA VII (BA5, BV5) 04.13-				**[CAMBIADO]:Break (Compact car-C Segment)**			
1.2 TSI (CJZB)	Gasolina	FWD	1197	63	86	05.13-03.17	*
1.2 TSI (CYVA)	Gasolina	FWD	1197	63	86	05.13-03.17	*
1.2 TSI (CJZA)	Gasolina	FWD	1197	77	105	04.13-08.20	*
1.2 TSI MultiFuel	Gasolina	FWD	1197	77	105	04.13-	*
1.2 TSI (CYVB)	Gasolina	FWD	1197	81	110	04.14-03.17	*
1.4 TSI BiFuel	Gasolina	FWD	1395	81	110	09.13-	*
1.4 TSI (CXSA)	Gasolina	FWD	1395	90	122	05.13-03.17	*
1.4 TSI (CZCA)	Gasolina	FWD	1395	92	125	05.14-08.20	*
1.4 TSI (CZDD)	Gasolina	FWD	1395	92	125	05.14-08.20	*
1.4 TSI (CHPA)	Gasolina	FWD	1395	103	140	05.13-08.20	*
1.4 TSI (CHPB)	Gasolina	FWD	1395	110	150	05.14-03.21	*
1.4 TSI (CZDA)	Gasolina	FWD	1395	110	150	05.14-03.21	*
1.4 TSI (DGXA)	Gasolina	FWD	1395	110	150	05.14-03.21	*
1.6 (CWVA)	Gasolina	FWD	1598	81	110	05.14-07.17	*
1.4 TGI CNG (CPWA)	Gasol./Gas (CNG)	FWD	1395	81	110	09.13-07.18	*
1.4 TSI MultiFuel (CPVA)	Gasol./Etanol	FWD	1395	90	122	04.13-03.17	*
1.4 TSI MultiFuel (CPVB)	Gasol./Etanol	FWD	1395	92	125	05.14-03.17	*
1.6 TDI (CLHB)	Diesel	FWD	1598	66	90	05.13-07.18	*
1.6 TDI (CRKA)	Diesel	FWD	1598	66	90	05.13-07.18	*
1.6 TDI (CXXA)	Diesel	FWD	1598	66	90	05.13-07.18	*

1.6 TDI (DDYB)	Diesel	FWD	1598	66	90	05.13-07.18	*
1.6 TDI (CLHA)	Diesel	FWD	1598	77	105	05.13-03.17	*
1.6 TDI 4motion (CLHA)	Diesel	4WD	1598	77	105	05.13-03.17	*
1.6 TDI (CRKB)	Diesel	FWD	1598	81	110	05.13-03.17	*
1.6 TDI (CXXB)	Diesel	FWD	1598	81	110	05.13-03.17	*
1.6 TDI (DBKA)	Diesel	FWD	1598	81	110	05.13-03.17	*
1.6 TDI 4motion (CRKB)	Diesel	4WD	1598	81	110	05.13-03.17	*
1.6 TDI 4motion (CXXB)	Diesel	4WD	1598	81	110	05.13-03.17	*
2.0 TDI (CRLD)	Diesel	FWD	1968	81	110	05.13-08.20	*
2.0 TDI (CRVA)	Diesel	FWD	1968	81	110	05.13-08.20	*
2.0 TDI (CYKB)	Diesel	FWD	1968	81	110	05.13-08.20	*
2.0 TDI (DCYB)	Diesel	FWD	1968	81	110	05.13-08.20	*
2.0 TDI (DEJB)	Diesel	FWD	1968	81	110	05.13-08.20	*
2.0 TDI (DFGB)	Diesel	FWD	1968	81	110	05.13-08.20	*
2.0 TDI (CRBC)	Diesel	FWD	1968	110	150	04.13-08.20	*
2.0 TDI (CRLB)	Diesel	FWD	1968	110	150	04.13-08.20	*
2.0 TDI (CRUA)	Diesel	FWD	1968	110	150	04.13-08.20	*
2.0 TDI (DCYA)	Diesel	FWD	1968	110	150	04.13-08.20	*
2.0 TDI (DEJA)	Diesel	FWD	1968	110	150	04.13-08.20	*
2.0 TDI (DFGA)	Diesel	FWD	1968	110	150	04.13-08.20	*
2.0 TDI 4motion (CRBC)	Diesel	4WD	1968	110	150	04.13-08.20	*
2.0 TDI 4motion (CRLB)	Diesel	4WD	1968	110	150	04.13-08.20	*
2.0 TDI 4motion (DCYA)	Diesel	4WD	1968	110	150	04.13-08.20	*
2.0 GTD	Diesel	FWD	1968	130	177	11.16-	*
2.0 GTD (CUNA)	Diesel	FWD	1968	135	184	01.15-07.19	*
2.0 GTD (DGCA)	Diesel	FWD	1968	135	184	01.15-07.19	*
2.0 GTD (DJGA)	Diesel	FWD	1968	135	184	01.15-07.19	*
JETTA V / BORA / VENTO (1K2) 09.04-12.13						**Sedán (Compact car-C Segment)**	
1.4 TSI (CAXA)	Gasolina	FWD	1390	90	122	05.07-10.10	*
1.4 TSI (BMY)	Gasolina	FWD	1390	103	140	07.06-10.10	*
1.4 TSI (CAVD)	Gasolina	FWD	1390	118	160	07.08-10.10	*
1.4 TSI (BLG)	Gasolina	FWD	1390	125	170	07.06-10.10	*
1.6 (BGU)	Gasolina	FWD	1595	75	102	09.04-10.10	*
1.6 (BSE)	Gasolina	FWD	1595	75	102	09.04-10.10	*
1.6 (BSF)	Gasolina	FWD	1595	75	102	09.04-10.10	*
1.6 (CCSA)	Gasolina	FWD	1595	75	102	09.04-10.10	*
1.6 FSI (BLF)	Gasolina	FWD	1598	85	115	09.05-10.10	*
2.0 FSI (BLR)	Gasolina	FWD	1984	110	150	08.05-10.10	*
2.0 FSI (BLX)	Gasolina	FWD	1984	110	150	08.05-10.10	*
2.0 FSI (BLY)	Gasolina	FWD	1984	110	150	08.05-10.10	*
2.0 FSI (BVY)	Gasolina	FWD	1984	110	150	08.05-10.10	*
2.0 FSI (BVZ)	Gasolina	FWD	1984	110	150	08.05-10.10	*
2.0 TFSI (AXX)	Gasolina	FWD	1984	147	200	10.05-10.10	*
2.0 TFSI (BPY)	Gasolina	FWD	1984	147	200	10.05-10.10	*
2.0 TFSI (BWA)	Gasolina	FWD	1984	147	200	10.05-10.10	*
2.0 TFSI (CAWB)	Gasolina	FWD	1984	147	200	10.05-10.10	*
2.0 TFSI (CBFA)	Gasolina	FWD	1984	147	200	10.05-10.10	*
2.0 TFSI (CCTA)	Gasolina	FWD	1984	147	200	10.05-10.10	*
2.5 (BGP)	Gasolina	FWD	2480	110	150	01.06-10.10	*
2.5 (BGQ)	Gasolina	FWD	2480	110	150	01.06-10.10	*
2.5 (BTK)	Gasolina	FWD	2480	110	150	01.06-10.10	*

2.5 (CBTA)	Gasolina	FWD	2480	125	170	07.08-10.10	*
2.5 (CBUA)	Gasolina	FWD	2480	125	170	07.08-10.10	*
2.5 (CCCA)	Gasolina	FWD	2480	125	170	07.08-10.10	*
1.6 MultiFuel (CCSA)	Gasol./Etanol	FWD	1595	75	102	01.08-10.10	*
1.6 TDI (CAYB)	Diesel	FWD	1598	66	90	12.09-10.10	*
1.6 TDI (CAYC)	Diesel	FWD	1598	77	105	06.09-10.10	*
1.9 TDI (BKC)	Diesel	FWD	1896	77	105	08.05-10.10	*
1.9 TDI (BLS)	Diesel	FWD	1896	77	105	08.05-10.10	*
1.9 TDI (BXE)	Diesel	FWD	1896	77	105	08.05-10.10	*
2.0 TDI (AZV)	Diesel	FWD	1968	100	136	09.05-10.10	*
2.0 TDI (CBDA)	Diesel	FWD	1968	100	136	09.05-10.10	*
2.0 TDI (BMM)	Diesel	FWD	1968	103	140	10.05-10.10	*
2.0 TDI 16V (BKD)	Diesel	FWD	1968	103	140	08.05-10.10	*
2.0 TDI 16V (CBDB)	Diesel	FWD	1968	103	140	08.05-10.10	*
2.0 TDI 16V (CBEA)	Diesel	FWD	1968	103	140	08.05-10.10	*
2.0 TDI 16V (CJAA)	Diesel	FWD	1968	103	140	08.05-10.10	*
2.0 TDI (BMN)	Diesel	FWD	1968	125	170	10.06-10.10	*
2.0 TDI (CEGA)	Diesel	FWD	1968	125	170	10.06-10.10	*
JETTA VI / VENTO (162, 163, AV3, AV2) 01.08-						**Sedán (Compact car-C Segment)**	
1.2 TSI (CBZB)	Gasolina	FWD	1197	77	105	10.10-12.17	*
1.4 TSI (CAXA)	Gasolina	FWD	1390	90	122	05.11-12.17	*
1.4 TSI (CMSB)	Gasolina	FWD	1390	90	122	05.11-12.17	*
1.4 TSI (CAVA)	Gasolina	FWD	1390	110	150	04.11-12.17	*
1.4 TSI (CTHA)	Gasolina	FWD	1390	110	150	04.11-12.17	*
1.4 TSI (CAVD)	Gasolina	FWD	1390	118	160	04.11-12.17	*
1.4 TSI (CTHD)	Gasolina	FWD	1390	118	160	04.11-12.17	*
1.4 TSI	Gasolina	FWD	1395	90	122	01.08-	*
1.4 TSI	Gasolina	FWD	1395	90	122	01.08-	*
1.4 TSI	Gasolina	FWD	1395	90	122	01.08-	*
1.6 (CFNA)	Gasolina	FWD	1598	77	105	12.11-04.18	*
1.6 (CLRA)	Gasolina	FWD	1598	77	105	12.11-04.18	*
2.0 (CBPA)	Gasolina	FWD	1984	85	115	06.10-12.17	*
2.0 (CKJA)	Gasolina	FWD	1984	85	115	06.10-12.17	*
2.0 TFSI (CBFA)	Gasolina	FWD	1984	147	200	12.10-07.14	*
2.0 TFSI (CCTA)	Gasolina	FWD	1984	147	200	12.10-07.14	*
2.0 TFSI (CCZA)	Gasolina	FWD	1984	147	200	12.10-07.14	*
2.0 TSI (CPLA)	Gasolina	FWD	1984	155	211	12.12-12.17	*
2.0 TSI (CPPA)	Gasolina	FWD	1984	155	211	12.12-12.17	*
2.0 TSI	Gasolina	FWD	1995	147	200	01.08-	*
2.0 TSI	Gasolina	FWD	1995	147	200	01.08-	*
2.0 TSI	Gasolina	FWD	1995	147	200	01.08-	*
2.5 (CBTA)	Gasolina	FWD	2480	125	170	04.10-12.17	*
2.5 (CBUA)	Gasolina	FWD	2480	125	170	04.10-12.17	*
2.5 (CCCA)	Gasolina	FWD	2480	125	170	04.10-12.17	*
1.4 TSI Hybrid (CNLA)	Gasol./eléc.	FWD	1395	125	170	04.11-12.17	*
1.4 TSI Hybrid (CRJA)	Gasol./eléc.	FWD	1395	125	170	04.11-12.17	*
1.6 TDI (CAYC)	Diesel	FWD	1598	77	105	04.10-07.15	*
2.0 TDI (CLCA)	Diesel	FWD	1968	81	110	10.10-12.17	*
2.0 TDI (CUUA)	Diesel	FWD	1968	81	110	10.10-12.17	*
2.0 TDI (CFFB)	Diesel	FWD	1968	103	140	02.11-12.17	*

2.0 TDI (CFHC)	Diesel	FWD	1968	103	140	02.11-12.17	*
2.0 TDI (CJAA)	Diesel	FWD	1968	103	140	02.11-12.17	*
2.0 TDI (CLCB)	Diesel	FWD	1968	103	140	02.11-12.17	*
PASSAT B7 (365) 08.10-12.14				**[CAMBIADO]:Furgón/Break (Large family car-D Segment)**			
2.0 TSI	Gasolina	FWD	1984	155	211	11.10-12.14	*
PASSAT B7 (362) 08.10-04.16				**Sedán (Large family car-D Segment)**			
1.4 TSI (CAXA)	Gasolina	FWD	1390	90	122	08.10-12.14	*
1.4 TSI (CTHD)	Gasolina	FWD	1390	118	160	11.12-12.14	*
1.8 TSI (CDAB)	Gasolina	FWD	1798	112	152	02.11-12.14	*
1.8 TSI (CDAA)	Gasolina	FWD	1798	118	160	08.10-12.14	*
2.0 TSI (CCZB)	Gasolina	FWD	1984	155	210	11.10-12.14	*
2.5 (CBTA)	Gasolina	FWD	2480	125	170	01.11-12.20	*
2.5 (CBUA)	Gasolina	FWD	2480	125	170	01.11-12.20	*
2.5 (CCCA)	Gasolina	FWD	2480	125	170	01.11-12.20	*
3.6 FSI	Gasolina	FWD	3597	206	280	01.12-	*
3.6 FSI 4motion (BWS)	Gasolina	4WD	3597	220	300	01.11-12.14	*
1.4 TSI EcoFuel (CDGA)	Gasol./Gas (CNG)	FWD	1390	110	150	08.10-12.14	*
1.4 TSI MultiFuel (CKMA)	Gasol./Etanol	FWD	1390	118	160	11.10-12.14	*
1.6 TDI (CAYC)	Diesel	FWD	1598	77	105	08.10-12.14	*
2.0 TDI (CFFA)	Diesel	FWD	1968	100	136	08.10-12.14	*
2.0 TDI (CFFB)	Diesel	FWD	1968	103	140	08.10-12.14	*
2.0 TDI 4motion (CFFB)	Diesel	4WD	1968	103	140	08.10-12.14	*
2.0 TDI (CFGB)	Diesel	FWD	1968	125	170	08.10-12.14	*
2.0 TDI (CLLA)	Diesel	FWD	1968	125	170	08.10-12.14	*
2.0 TDI 4motion (CFGB)	Diesel	4WD	1968	125	170	08.10-01.13	*
2.0 TDI (CFGC)	Diesel	FWD	1968	130	177	12.12-12.14	*
2.0 TDI 4motion (CFGC)	Diesel	4WD	1968	130	177	01.13-12.14	*
PASSAT B7 ALLTRACK (365) 01.12-12.14				**[CAMBIADO]:Break (Large family car-D Segment)**			
1.8 TSI (CDAB)	Gasolina	FWD	1798	112	152	01.12-12.14	*
1.8 TSI (CDAA)	Gasolina	FWD	1798	118	160	01.12-12.14	*
2.0 TSI 4motion (CCZB)	Gasolina	4WD	1984	155	210	01.12-12.14	*
2.0 TDI (CFFB)	Diesel	FWD	1968	103	140	01.12-12.14	*
2.0 TDI 4motion (CFFB)	Diesel	4WD	1968	103	140	01.12-12.14	*
2.0 TDI 4motion (CFGB)	Diesel	4WD	1968	125	170	01.12-12.14	*
2.0 TDI 4motion (CFGC)	Diesel	4WD	1968	130	177	01.13-12.14	*
PASSAT B7 Variant (365) 08.10-12.15				**[CAMBIADO]:Break (Large family car-D Segment)**			
1.4 TSI (CAXA)	Gasolina	FWD	1390	90	122	08.10-12.14	*
1.4 TSI (CTHD)	Gasolina	FWD	1390	118	160	11.12-12.14	*
1.8 TSI (CDAB)	Gasolina	FWD	1798	112	152	02.11-12.14	*
1.8 TSI (CDAA)	Gasolina	FWD	1798	118	160	08.10-12.14	*
2.0 TSI (CCZB)	Gasolina	FWD	1984	155	210	11.10-12.15	*
3.6 FSI 4motion (BWS)	Gasolina	4WD	3597	220	300	01.11-12.14	*
1.4 TSI EcoFuel (CDGA)	Gasol./Gas (CNG)	FWD	1390	110	150	08.10-12.14	*
1.4 TSI MultiFuel (CKMA)	Gasol./Etanol	FWD	1390	118	160	11.10-12.14	*
1.6 TDI (CAYC)	Diesel	FWD	1598	77	105	08.10-12.14	*
2.0 TDI (CFFA)	Diesel	FWD	1968	100	136	08.10-12.14	*

2.0 TDI (CFFB)	Diesel	FWD	1968	103	140	08.10-12.14	*
2.0 TDI 4motion (CFFB)	Diesel	4WD	1968	103	140	08.10-12.14	*
2.0 TDI (CFGB)	Diesel	FWD	1968	125	170	08.10-12.14	*
2.0 TDI (CLLA)	Diesel	FWD	1968	125	170	08.10-12.14	*
2.0 TDI 4motion (CFGB)	Diesel	4WD	1968	125	170	08.10-01.13	*
2.0 TDI (CFGC)	Diesel	FWD	1968	130	177	12.12-12.14	*
2.0 TDI 4motion (CFGC)	Diesel	4WD	1968	130	177	01.13-12.14	*
PASSAT B8 (3G2, CB2) 08.14-				**Sedán (Large family car-D Segment)**			
1.4 TSI (CZCA)	Gasolina	FWD	1395	92	125	11.14-11.18	*
1.4 TSI (CZDA)	Gasolina	FWD	1395	110	150	11.14-03.24	*
1.4 TSI (CZEA)	Gasolina	FWD	1395	110	150	11.14-03.24	*
1.6 TDI (DCXA)	Diesel	FWD	1598	88	120	08.14-11.20	*
1.6 TDI (DCZA)	Diesel	FWD	1598	88	120	08.14-11.20	*
2.0 TDI (CRLB)	Diesel	FWD	1968	110	150	11.14-03.24	*
2.0 TDI (DBGA)	Diesel	FWD	1968	110	150	11.14-03.24	*
2.0 TDI (DFGA)	Diesel	FWD	1968	110	150	11.14-03.24	*
2.0 TDI (DSRA)	Diesel	FWD	1968	110	150	11.14-03.24	*
2.0 TDI (DSRB)	Diesel	FWD	1968	110	150	11.14-03.24	*
2.0 TDI (CUPA)	Diesel	FWD	1968	135	184	07.15-05.16	*
2.0 TDI (DDAA)	Diesel	FWD	1968	140	190	11.14-03.24	*
2.0 TDI (DFCA)	Diesel	FWD	1968	140	190	11.14-03.24	*
2.0 TDI (DFHA)	Diesel	FWD	1968	140	190	11.14-03.24	*
2.0 TDI 4motion (DDAA)	Diesel	4WD	1968	140	190	11.14-03.24	*
2.0 TDI 4motion (DFCA)	Diesel	4WD	1968	140	190	11.14-03.24	*
2.0 TDI 4motion (DFHA)	Diesel	4WD	1968	140	190	11.14-03.24	*
2.0 TDI 4motion (CUAA)	Diesel	4WD	1968	176	240	08.14-11.20	*
PASSAT B8 ALLTRACK Variant (3G5, CB5) 05.15-				**[CAMBIADO]:Break (Large family car-D Segment)**			
2.0 TSI 4motion (CHHB)	Gasolina	4WD	1984	162	220	07.15-03.24	*
2.0 TDI 4motion (CRLB)	Diesel	4WD	1968	110	150	05.15-11.17	*
2.0 TDI 4motion (DFEA)	Diesel	4WD	1968	110	150	05.15-11.17	*
2.0 TDI 4motion (CUPA)	Diesel	4WD	1968	135	184	07.15-05.16	*
2.0 TDI 4motion (DDAA)	Diesel	4WD	1968	140	190	05.15-03.24	*
2.0 TDI 4motion (DFCA)	Diesel	4WD	1968	140	190	05.15-03.24	*
2.0 TDI 4motion (DFHA)	Diesel	4WD	1968	140	190	05.15-03.24	*
2.0 TDI 4motion (CUAA)	Diesel	4WD	1968	176	240	05.15-11.20	*
PASSAT B8 Variant (3G5, CB5) 08.14-				**[CAMBIADO]:Break (Large family car-D Segment)**			
1.4 TSI (CZCA)	Gasolina	FWD	1395	92	125	11.14-11.18	*
1.4 TSI (CZDA)	Gasolina	FWD	1395	110	150	11.14-03.24	*
1.4 TSI (CZEA)	Gasolina	FWD	1395	110	150	11.14-03.24	*
1.6 TDI (DCXA)	Diesel	FWD	1598	88	120	08.14-11.20	*
1.6 TDI (DCZA)	Diesel	FWD	1598	88	120	08.14-11.20	*
2.0 TDI (CRLB)	Diesel	FWD	1968	110	150	11.14-03.24	*
2.0 TDI (DBGA)	Diesel	FWD	1968	110	150	11.14-03.24	*
2.0 TDI (DFGA)	Diesel	FWD	1968	110	150	11.14-03.24	*
2.0 TDI (DSRA)	Diesel	FWD	1968	110	150	11.14-03.24	*
2.0 TDI (DSRB)	Diesel	FWD	1968	110	150	11.14-03.24	*
2.0 TDI (CUPA)	Diesel	FWD	1968	135	184	07.15-05.16	*
2.0 TDI (DDAA)	Diesel	FWD	1968	140	190	11.14-03.24	*
2.0 TDI (DFCA)	Diesel	FWD	1968	140	190	11.14-03.24	*
2.0 TDI (DFHA)	Diesel	FWD	1968	140	190	11.14-03.24	*

2.0 TDI 4motion (DDAA)	Diesel	4WD	1968	140	190	11.14-03.24	*
2.0 TDI 4motion (DFCA)	Diesel	4WD	1968	140	190	11.14-03.24	*
2.0 TDI 4motion (DFHA)	Diesel	4WD	1968	140	190	11.14-03.24	*
2.0 TDI 4motion (CUAA)	Diesel	4WD	1968	176	240	08.14-11.20	*
SCIROCCO III (137, 138) 05.08-						**Coupé (Sport compact car-C Segment)**	
1.4 TSI (CAXA)	Gasolina	FWD	1390	90	122	08.08-11.17	*
1.4 TSI (CMSB)	Gasolina	FWD	1390	90	122	08.08-11.17	*
1.4 TSI (CAVD)	Gasolina	FWD	1390	118	160	05.08-11.17	*
1.4 TSI (CNWA)	Gasolina	FWD	1390	118	160	05.08-11.17	*
1.4 TSI (CTHD)	Gasolina	FWD	1390	118	160	05.08-11.17	*
1.4 TSI (CTKA)	Gasolina	FWD	1390	118	160	05.08-11.17	*
1.4 TSI (CXSB)	Gasolina	FWD	1395	92	125	11.13-11.17	*
1.4 TSI (CZCA)	Gasolina	FWD	1395	92	125	11.13-11.17	*
1.4 TSI (CZDA)	Gasolina	FWD	1395	110	150	07.15-11.17	*
2.0 TSI (CULA)	Gasolina	FWD	1984	132	180	11.13-11.17	*
2.0 TFSI (CAWB)	Gasolina	FWD	1984	147	200	05.08-11.09	*
2.0 TSI (CCZB)	Gasolina	FWD	1984	155	210	11.09-11.17	*
2.0 TSI (CULC)	Gasolina	FWD	1984	162	220	11.13-11.17	*
2.0 R (CDLC)	Gasolina	FWD	1984	188	256	11.09-11.17	*
2.0 R (CDLA)	Gasolina	FWD	1984	195	265	11.09-11.17	*
2.0 R (CDLK)	Gasolina	FWD	1984	206	280	05.14-11.17	*
2.0 TDI (CFHB)	Diesel	FWD	1968	100	136	11.10-11.17	*
2.0 TDI (CBDB)	Diesel	FWD	1968	103	140	08.08-11.17	*
2.0 TDI (CFHC)	Diesel	FWD	1968	103	140	08.08-11.17	*
2.0 TDI (CUUB)	Diesel	FWD	1968	110	150	11.13-11.17	*
2.0 TDI (CBBB)	Diesel	FWD	1968	125	170	05.09-11.17	*
2.0 TDI (CFGB)	Diesel	FWD	1968	125	170	05.09-11.17	*
2.0 TDI (CFGC)	Diesel	FWD	1968	130	177	01.13-11.17	*
2.0 TDI (CUWA)	Diesel	FWD	1968	135	184	05.14-11.17	*
2.0 TDI (CUXA)	Diesel	FWD	1968	135	184	05.14-11.17	*
SCIROCCO III (137) 06.08-05.14						**Furgón/hatchback (Sport compact car-C Segment)**	
1.4 TSI (CAXA)	Gasolina	FWD	1390	90	122	08.08-05.14	*
1.4 TSI (CAVD)	Gasolina	FWD	1390	118	160	06.08-05.14	*
2.0 TFSI (CCZB)	Gasolina	FWD	1984	155	211	11.09-05.14	*
2.0 TDI (CBDB)	Diesel	FWD	1968	103	140	08.08-05.14	*
2.0 TDI (CFHC)	Diesel	FWD	1968	103	140	08.08-05.14	*
2.0 TDI (CBBB)	Diesel	FWD	1968	125	170	05.09-05.14	*
2.0 TDI (CFGB)	Diesel	FWD	1968	125	170	05.09-05.14	*
TOURAN (1T1, 1T2) 02.03-01.11						**MPV (Compact MPV-M1 Segment)**	
1.4 TSI (BMY)	Gasolina	FWD	1390	103	140	02.06-05.10	*
1.4 TSI (CAVC)	Gasolina	FWD	1390	103	140	02.06-05.10	*
1.4 TSI (BLG)	Gasolina	FWD	1390	125	170	11.06-05.10	*
1.4 TSI (CAVB)	Gasolina	FWD	1390	125	170	11.06-05.10	*
1.6 (BGU)	Gasolina	FWD	1595	75	102	07.03-05.10	*
1.6 (BSE)	Gasolina	FWD	1595	75	102	07.03-05.10	*
1.6 (BSF)	Gasolina	FWD	1595	75	102	07.03-05.10	*
1.6 FSI (BAG)	Gasolina	FWD	1598	85	115	02.03-01.07	*
1.6 FSI (BLF)	Gasolina	FWD	1598	85	115	02.03-01.07	*
1.6 FSI (BLP)	Gasolina	FWD	1598	85	115	02.03-01.07	*
2.0 FSI (AXW)	Gasolina	FWD	1984	110	150	10.03-01.07	*

2.0 FSI (BLR)	Gasolina	FWD	1984	110	150	10.03-01.07	*
2.0 FSI (BLX)	Gasolina	FWD	1984	110	150	10.03-01.07	*
2.0 FSI (BLY)	Gasolina	FWD	1984	110	150	10.03-01.07	*
2.0 FSI (BVY)	Gasolina	FWD	1984	110	150	10.03-01.07	*
2.0 FSI (BVZ)	Gasolina	FWD	1984	110	150	10.03-01.07	*
1.6 BiFuel (BSF)	Gasol./Gas (LPG)	FWD	1595	75	102	11.06-05.10	*
1.9 TDI (BRU)	Diesel	FWD	1896	66	90	11.04-05.10	*
1.9 TDI (BXF)	Diesel	FWD	1896	66	90	11.04-05.10	*
1.9 TDI (BXJ)	Diesel	FWD	1896	66	90	11.04-05.10	*
1.9 TDI (AVQ)	Diesel	FWD	1896	74	100	02.03-05.04	*
1.9 TDI (BKC)	Diesel	FWD	1896	77	105	08.03-05.10	*
1.9 TDI (BLS)	Diesel	FWD	1896	77	105	08.03-05.10	*
1.9 TDI (BXE)	Diesel	FWD	1896	77	105	08.03-05.10	*
2.0 TDI (AZV)	Diesel	FWD	1968	100	136	02.03-05.10	*
2.0 TDI (BMM)	Diesel	FWD	1968	103	140	12.05-05.10	*
2.0 TDI 16V (BKD)	Diesel	FWD	1968	103	140	08.03-05.10	*
2.0 TDI (BMN)	Diesel	FWD	1968	125	170	12.05-05.10	*
2.0 TDI (CFJA)	Diesel	FWD	1968	125	170	12.05-05.10	*
1.4 TSI EcoFuel (CDGA)	CNG	FWD	1390	110	150	05.09-05.10	*
2.0 EcoFuel (BSX)	CNG	FWD	1984	80	109	02.06-05.09	*
TOURAN II / GOLF TOURAN (1T3) 05.10-05.15				**Furgoneta/MPV (Compact MPV-M1 Segment)**			
1.2 TSI	Gasolina	FWD	1197	77	105	05.10-05.15	*
1.4 TSI	Gasolina	FWD	1390	103	140	05.10-05.15	*
1.4 TSI	Gasolina	FWD	1390	125	170	05.10-05.15	*
1.4 TSI EcoFuel	Gasol./Gas (CNG)	FWD	1390	110	150	05.10-05.15	*
1.6 TDI	Diesel	FWD	1598	66	90	05.10-05.15	*
1.6 TDI	Diesel	FWD	1598	77	105	05.10-05.15	*
2.0 TDI	Diesel	FWD	1968	103	140	05.10-05.15	*
2.0 TDI	Diesel	FWD	1968	125	170	05.10-01.13	*
TOURAN II / GOLF TOURAN (1T3) 05.10-09.16				**MPV (Compact MPV-M1 Segment)**			
1.2 TSI (CBZB)	Gasolina	FWD	1197	77	105	05.10-05.15	*
1.4 TSI (CAVC)	Gasolina	FWD	1390	103	140	05.10-05.15	*
1.4 TSI (CTHC)	Gasolina	FWD	1390	103	140	05.10-05.15	*
1.4 TSI (CAVB)	Gasolina	FWD	1390	125	170	05.10-05.15	*
1.4 TSI (CTHB)	Gasolina	FWD	1390	125	170	05.10-05.15	*
1.4 TSI EcoFuel (CDGA)	Gasol./Gas (CNG)	FWD	1390	110	150	05.10-05.15	*
1.6 TDI (CAYB)	Diesel	FWD	1598	66	90	05.10-05.15	*
1.6 TDI (CAYC)	Diesel	FWD	1598	77	105	05.10-05.15	*
2.0 TDI (CFHF)	Diesel	FWD	1968	81	110	11.10-05.15	*
2.0 TDI (CLCA)	Diesel	FWD	1968	81	110	11.10-05.15	*
2.0 TDI	Diesel	RWD	1968	96	130	01.13-	*
2.0 TDI (CFHC)	Diesel	FWD	1968	103	140	05.10-05.15	*
2.0 TDI (CFJA)	Diesel	FWD	1968	125	170	05.10-01.13	*
2.0 TDI (CFJB)	Diesel	FWD	1968	130	177	01.13-05.15	*
TOURAN VAN (1T1, 1T2) 02.03-05.10				**Furgoneta/MPV (Compact MPV-M1 Segment)**			
FSI	Gasolina	FWD	1598	85	116	02.03-11.06	*
2.0 FSI	Gasolina	FWD	1984	110	150	05.04-01.07	*

2.0 EcoFuel	Gasol./Gas (CNG)	FWD	1984	80	109	02.06-11.06	*
1.9 TDI	Diesel	FWD	1896	66	90	11.04-05.10	*
1.9 TDI	Diesel	FWD	1896	74	101	10.03-05.05	*
1.9 TDI	Diesel	FWD	1896	77	105	08.03-11.06	*
2.0 TDI	Diesel	FWD	1968	100	136	02.03-05.10	*
2.0 TDI	Diesel	FWD	1968	103	140	12.05-05.10	*
2.0 TDI	Diesel	FWD	1968	103	140	08.03-05.10	*
VW (FAW)							
CADDY (9HB) 04.04-12.07				**[CAMBIADO]:Furgón (LCVs-N1 Segment)**			
1.6	Gasolina	FWD	1595	75	102	03.05-	*
2.0	Gasolina	FWD	1996	51	69	03.05-	*
VW (SVW)							
TOURAN II (9R1, 9R3) 11.04-				**MPV (Compact MPV-M1 Segment)**			
1.4 T	Gasolina	FWD	1390	96	131	12.10-	*
1.8 Turbo	Gasolina	FWD	1781	110	148	11.04-01.08	*
2.0	Gasolina	FWD	1984	85	114	11.04-	*
2.0	Gasolina	FWD	1984	88	120	04.09-	*