LISTA DE APLICACIONES - BUYERS GUIDE

RB1804

8 424073 134783

Qty: 300 Weight: 1.405

O.E.M.	MAKE
16 111 408 80	CITROËN
16 114 574 80	PEUGEOT
16 172 650 80	PEUGEOT
4253.59	PEUGEOT
4253.60	CITROËN
4254.69	CITROËN
60 01 073 129	FIAT
7 177 002 8	FIAT
7 177 314 9	FIAT
7 736 401 6	FIAT
7 736 908 7	FIAT
86 60 004 476	RENAULT
86 71 016 690	RENAULT
E172302	PEUGEOT

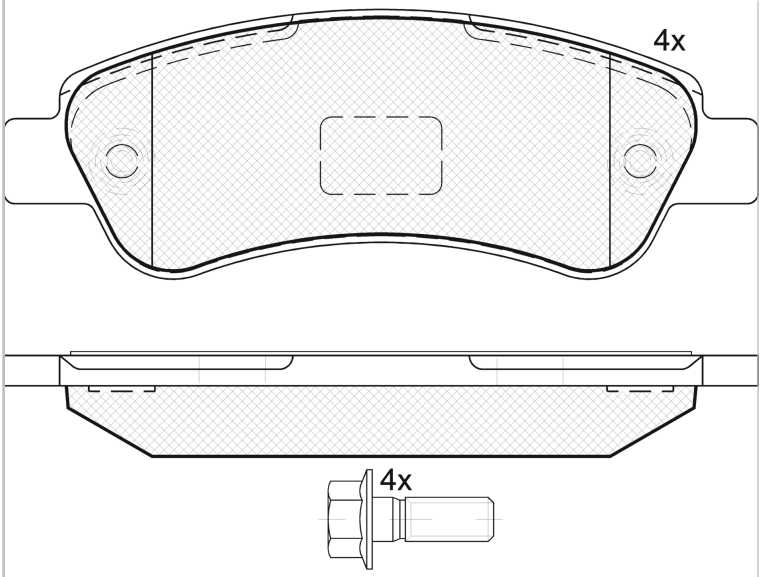

2- Ref. 690059

RB1804

E 9 90R-01111/1628

Bosch

136.9x49x19

WVA	FMSI
24465	D1490-8690
	D2448-9674

Sin Filas

		Trac.	CC	Kw	CV		Front / Rear
CITROËN							
JUMPER III / RELAY 04.06-							**[CAMBIADO]:Furgón (LCVs-N1 Segment)**
ë-JUMPER	Eléctrico	FWD		100	136	07.21-10.23	*
2.0 BlueHDi 110 (AHM (DW10FUE))	Diesel	FWD	1997	81	110	11.15-09.19	*
2.0 BlueHDi 130 (AHN (DW10FUD))	Diesel	FWD	1997	96	130	11.15-09.19	*
2.0 BlueHDi 160 (AHP (DW10FUC))	Diesel	FWD	1997	120	163	11.15-09.19	*
2.0 BlueHDi 160 4x4 (AHP (DW10FUC))	Diesel	4WD	1997	120	163	11.15-09.19	*
2.2 HDi 100 (4HV (P22DTE))	Diesel	FWD	2198	74	101	04.06-12.12	*
2.2 HDi 110 (4HG (P22DTE))	Diesel	FWD	2198	81	110	07.11-12.20	*
2.2 HDi 120 (4HU (P22DTE))	Diesel	FWD	2198	88	120	04.06-12.16	*
2.2 HDi 130 (4HH (P22DTE))	Diesel	FWD	2198	96	130	07.11-	*
2.2 HDi 150 (4HJ (P22DTE))	Diesel	FWD	2198	110	150	07.11-	*
3.0 HDi 145 (F30DTE (F1CE3481N))	Diesel	FWD	2999	107	146	07.10-12.13	*
3.0 HDi 155 (F1CE0481D (F30DT))	Diesel	FWD	2999	115	156	07.06-12.15	*
3.0 HDi 160 (F1CE0481D (F30DT))	Diesel	FWD	2999	116	157	09.06-12.15	*
3.0 HDi 180 (F1CE3481E (F30DTE))	Diesel	FWD	2999	130	177	07.11-	*
JUMPER III / RELAY 04.06-							**Bus (Minibus-M2-Segment)**
2.0 BlueHDi 110 (AHM (DW10FUE))	Diesel	FWD	1997	81	110	07.15-09.19	*
2.0 BlueHDi 130 (AHN (DW10FUD))	Diesel	FWD	1997	96	130	07.15-09.19	*
2.0 BlueHDi 160 (AHP (DW10FUC))	Diesel	FWD	1997	120	163	07.15-09.19	*
2.2 HDi 100 (4HV (P22DTE))	Diesel	FWD	2198	74	101	04.06-	*
2.2 HDi 110 (4HG (P22DTE))	Diesel	FWD	2198	81	110	07.11-12.20	*
2.2 HDi 120 (4HU (P22DTE))	Diesel	FWD	2198	88	120	04.06-12.16	*
2.2 HDi 130 (4HH (P22DTE))	Diesel	FWD	2198	96	130	07.11-	*

2.2 HDi 150 (4HJ (P22DTE))	Diesel	FWD	2198	110	150	07.11-	*
3.0 HDi 155 (F1CE0481D (F30DT))	Diesel	FWD	2999	115	157	07.06-	*
3.0 HDi 160 (F1CE0481D (F30DT))	Diesel	FWD	2999	116	157	09.06-	*
3.0 HDi 180 (F1CE3481E (F30DTE))	Diesel	FWD	2999	130	177	07.11-	*
JUMPER III / RELAY 04.06-				**Caja/Chasis (LCVs-N1 Segment)**			
ë-JUMPER	Eléctrico	FWD		100	136	03.22-10.23	*
2.0 BlueHDi 110 (AHM (DW10FUE))	Diesel	FWD	1997	81	110	11.15-09.19	*
2.0 BlueHDi 130 (AHN (DW10FUD))	Diesel	FWD	1997	96	130	11.15-09.19	*
2.0 BlueHDi 130 4x4 (AHN (DW10FUD))	Diesel	4WD	1997	96	130	11.15-09.19	*
2.0 BlueHDi 160 (AHP (DW10FUC))	Diesel	FWD	1997	120	163	11.15-09.19	*
2.0 BlueHDi 160 4x4 (AHP (DW10FUC))	Diesel	4WD	1997	120	163	11.15-09.19	*
2.2 HDi 100 (4HV (P22DTE))	Diesel	FWD	2198	74	101	04.06-	*
2.2 HDi 110 (4HG (P22DTE))	Diesel	FWD	2198	81	110	07.11-12.20	*
2.2 HDi 120 (4HU (P22DTE))	Diesel	FWD	2198	88	120	04.06-12.16	*
2.2 HDi 130 (4HH (P22DTE))	Diesel	FWD	2198	96	130	07.06-	*
2.2 HDi 150 (4HJ (P22DTE))	Diesel	FWD	2198	110	150	07.11-	*
3.0 HDi 145 (F30DTE (F1CE3481N))	Diesel	FWD	2999	107	146	07.10-12.13	*
3.0 HDi 160 (F1CE0481D (F30DT))	Diesel	FWD	2999	116	157	09.06-12.15	*
3.0 HDi 180 (F1CE3481E (F30DTE))	Diesel	FWD	2999	130	177	07.11-	*
FIAT							
DUCATO III (250_) 07.06-				**[CAMBIADO]:Furgón (LCVs-N1 Segment)**			
115 Multijet 2,0 D (250 A1.000)	Diesel	FWD	1956	85	116	06.11-	*
115 Multijet 2,0 D (250 A2.000)	Diesel	FWD	1956	85	116	06.11-	*
100 Multijet 2,2 D (4HV)	Diesel	FWD	2198	74	100	07.06-05.11	*
110 Multijet 2,3 D (F1AE3481G)	Diesel	FWD	2287	83	113	10.11-07.14	*
120 Multijet 2,3 D (F1AE0481D)	Diesel	FWD	2287	88	120	07.06-	*
120 Multijet 2,3 D (F1AGL4114)	Diesel	FWD	2287	88	120	07.06-	*
120 Multijet 2,3 D 4x4 (F1AE0481D)	Diesel	4WD	2287	88	120	03.10-	*
130 Multijet 2,3 D	Diesel	FWD	2287	93	126	08.06-12.18	*
130 Multijet 2,3 D (F1AE0481N)	Diesel	FWD	2287	96	131	08.06-	*
130 Multijet 2,3 D (F1AE3481D)	Diesel	FWD	2287	96	131	08.06-	*
130 Multijet 2,3 D (F1AGL411D)	Diesel	FWD	2287	96	131	08.06-	*
150 Multijet 2,3 D (F1AE3481E)	Diesel	FWD	2287	109	148	06.11-	*
150 Multijet 2,3 D (F1AGL411A)	Diesel	FWD	2287	110	150	12.15-	*
150 Multijet 2,3 D (F1AGL411C)	Diesel	FWD	2287	110	150	12.15-	*
180 Multijet 2,3 D (F1AGL4111)	Diesel	FWD	2287	130	177	12.15-	*
180 Multijet 2,3 D (F1AGL411B)	Diesel	FWD	2287	130	177	12.15-	*
150 Multijet 3,0 D (F1CE3481N)	Diesel	FWD	2999	107	146	04.10-07.14	*
160 Multijet 3,0 D (F1CE3481M)	Diesel	FWD	2999	115	156	07.06-12.11	*
160 Multijet 3,0 D (F1CE0481D)	Diesel	FWD	2999	116	158	07.06-05.11	*
180 Multijet 3,0 D (F1CE3481E)	Diesel	FWD	2999	130	177	06.11-	*
140 Natural Power (F1CE0441A)	CNG	FWD	2999	100	136	04.09-	*
140 Natural Power (F1CFA401A)	CNG	FWD	2999	100	136	04.09-	*
DUCATO III (250_) 07.06-				**Bus (Minibus-M2-Segment)**			
115 Multijet 2,0 D (250 A1.000)	Diesel	FWD	1956	85	116	06.11-	*
115 Multijet 2,0 D (250 A2.000)	Diesel	FWD	1956	85	116	06.11-	*
100 Multijet 2,2 D (4HV)	Diesel	FWD	2198	74	100	07.06-05.11	*
110 Multijet 2,3 D (F1AE3481G)	Diesel	FWD	2287	83	113	10.11-07.14	*
120 Multijet 2,3 D (F1AE0481D)	Diesel	FWD	2287	88	120	07.06-10.13	*
130 Multijet 2,3 D	Diesel	FWD	2287	93	126	01.10-	*

130 Multijet 2,3 D (F1AE0481N)	Diesel	FWD	2287	96	131	01.07-	*
130 Multijet 2,3 D (F1AE3481D)	Diesel	FWD	2287	96	131	01.07-	*
130 Multijet 2,3 D (F1AGL411D)	Diesel	FWD	2287	96	131	01.07-	*
150 Multijet 2,3 D (F1AE3481E)	Diesel	FWD	2287	109	148	06.11-	*
150 Multijet 2,3 D (F1AGL411A)	Diesel	FWD	2287	110	150	04.15-	*
150 Multijet 2,3 D (F1AGL411C)	Diesel	FWD	2287	110	150	04.15-	*
180 Multijet 2,3 D	Diesel	FWD	2287	130	177	12.15-	*
150 Multijet 3,0 D (F1CE3481N)	Diesel	FWD	2999	107	146	04.10-07.14	*
160 Multijet 3,0 D (F1CE0481D)	Diesel	FWD	2999	115	156	10.06-05.11	*
160 Multijet 3,0 D (F1CE0481D)	Diesel	FWD	2999	116	158	07.06-05.11	*
160 Multijet 3,0 D (F1CE3481M)	Diesel	FWD	2999	116	158	07.06-05.11	*
180 Multijet 3,0 D (F1CE3481E)	Diesel	FWD	2999	130	177	06.11-	*
140 Natural Power (F1CE0441A)	CNG	FWD	2999	100	136	04.09-	*
140 Natural Power (F1CFA401A)	CNG	FWD	2999	100	136	04.09-	*
DUCATO III (250_) 07.06-				**Caja/Chasis (LCVs-N1 Segment)**			
115 Multijet 2,0 D (250 A1.000)	Diesel	FWD	1956	85	116	06.11-	*
115 Multijet 2,0 D (250 A2.000)	Diesel	FWD	1956	85	116	06.11-	*
100 Multijet 2,2 D (4HV)	Diesel	FWD	2198	74	100	07.06-05.11	*
110 Multijet 2,3 D (F1AE3481G)	Diesel	FWD	2287	82	111	08.06-	*
110 Multijet 2,3 D (F1AE3481G)	Diesel	FWD	2287	83	113	10.11-07.14	*
120 Multijet 2,3 D (F1AE0481D)	Diesel	FWD	2287	88	120	07.06-	*
120 Multijet 2,3 D (F1AGL4114)	Diesel	FWD	2287	88	120	07.06-	*
120 Multijet 2,3 D 4x4 (F1AE0481D)	Diesel	4WD	2287	88	120	03.10-	*
130 Multijet 2,3 D	Diesel	FWD	2287	93	126	08.06-	*
130 Multijet 2,3 D (F1AE0481N)	Diesel	FWD	2287	96	131	08.06-	*
130 Multijet 2,3 D (F1AE3481D)	Diesel	FWD	2287	96	131	08.06-	*
130 Multijet 2,3 D (F1AGL411D)	Diesel	FWD	2287	96	131	08.06-	*
150 Multijet 2,3 D (F1AE3481E)	Diesel	FWD	2287	109	148	06.11-	*
150 Multijet 2,3 D (F1AGL411C)	Diesel	FWD	2287	110	150	12.15-	*
180 Multijet 2,3 D (F1AGL4111)	Diesel	FWD	2287	130	177	12.15-	*
180 Multijet 2,3 D (F1AGL411B)	Diesel	FWD	2287	130	177	12.15-	*
150 Multijet 3,0 D (F1CE3481N)	Diesel	FWD	2999	107	146	04.10-07.14	*
160 Multijet 3,0 D (F1CE3481M)	Diesel	FWD	2999	115	156	07.06-05.11	*
160 Multijet 3,0 D (F1CE0481D)	Diesel	FWD	2999	116	158	07.06-05.14	*
180 Multijet 3,0 D (F1CE3481E)	Diesel	FWD	2999	130	177	06.11-	*
140 Natural Power (F1CE0441A)	CNG	FWD	2999	100	136	04.09-	*
140 Natural Power (F1CFA401A)	CNG	FWD	2999	100	136	04.09-	*
OPEL							
MOVANO C (U9) 12.21-				**Caja/Chasis (LCVs-N1 Segment)**			
MOVANO-e	Eléctrico	FWD		100	136	04.23-10.23	*
PEUGEOT							
BOXER III / MANAGER 04.06-				**[CAMBIADO]:Furgón (LCVs-N1 Segment)**			
e-Boxer	Eléctrico	FWD		100	136	07.21-10.23	*
2.0 BlueHDi 110 (AHM (DW10FUE))	Diesel	FWD	1997	81	110	03.16-09.19	*
2.0 BlueHDi 130 (AHN (DW10FUD))	Diesel	FWD	1997	96	130	03.16-09.19	*
2.0 FURGAO (AHN (DW10FUD))	Diesel	FWD	1997	96	130	01.19-	*
2.0 BlueHDi 160 (AHP (DW10FUC))	Diesel	FWD	1997	120	163	03.16-12.23	*
2.2 HDi 100 (4HV (P22DTE))	Diesel	FWD	2198	74	101	04.06-	*
2.2 HDi 110 (4HG (P22DTE))	Diesel	FWD	2198	81	110	03.11-12.20	*
2.2 HDi 120 (4HU (P22DTE))	Diesel	FWD	2198	88	120	04.06-12.16	*

2.2 HDi 130 (4HH (P22DTE))	Diesel	FWD	2198	96	131	03.11-	*
2.2 HDi 150 (4HJ (P22DTE))	Diesel	FWD	2198	110	150	03.11-	*
3.0 HDi 145 (F1CE3481N (F30DTE))	Diesel	FWD	2999	107	146	04.10-12.13	*
3.0 HDi 155 (F1CE0481D (F30DT))	Diesel	FWD	2999	115	156	07.06-12.15	*
3.0 HDi 160 (F1CE0481D (F30DT))	Diesel	FWD	2999	116	156	04.06-12.15	*
3.0 HDi 175 (F1CE3481E (F30DTE))	Diesel	FWD	2999	130	177	03.11-	*
BOXER III / MANAGER 09.05-						**Bus (Minibus-M2-Segment)**	
2.0 BlueHDi 110 (AHM (DW10FUE))	Diesel	FWD	1997	81	110	07.15-09.19	*
2.0 BlueHDi 130 (AHN (DW10FUD))	Diesel	FWD	1997	96	130	07.15-09.19	*
2.0 BlueHDi 160 (AHP (DW10FUC))	Diesel	FWD	1997	120	163	07.15-09.19	*
2.2 HDi 100 (4HV (P22DTE))	Diesel	FWD	2198	74	101	04.06-	*
2.2 HDi 110 (4HG (P22DTE))	Diesel	FWD	2198	81	110	03.11-12.20	*
2.2 HDi 120 (4HU (P22DTE))	Diesel	FWD	2198	88	120	04.06-12.16	*
2.2 HDi 130 (4HH (P22DTE))	Diesel	FWD	2198	96	131	03.11-	*
2.2 HDi 150 (4HJ (P22DTE))	Diesel	FWD	2198	110	150	03.11-	*
3.0 HDi 145 (F1CE3481N (F30DTE))	Diesel	FWD	2999	107	146	04.10-12.13	*
3.0 HDi 160 (F1CE0481D (F30DT))	Diesel	FWD	2999	115	156	04.06-12.15	*
3.0 HDi 175 (F1CE3481E (F30DTE))	Diesel	FWD	2999	130	177	03.11-	*
BOXER III / MANAGER 04.06-						**Caja/Chasis (LCVs-N1 Segment)**	
e-Boxer	Eléctrico	FWD		100	136	11.21-10.23	*
2.0 BlueHDi 110 (AHM (DW10FUE))	Diesel	FWD	1997	81	110	03.16-09.19	*
2.0 BlueHDi 130 (AHN (DW10FUD))	Diesel	FWD	1997	96	130	03.16-09.19	*
2.0 BlueHDi 160 (AHP (DW10FUC))	Diesel	FWD	1997	120	163	03.16-12.23	*
2.2 HDi 100 (4HV (P22DTE))	Diesel	FWD	2198	74	101	04.06-	*
2.2 HDi 110 (4HG (P22DTE))	Diesel	FWD	2198	81	110	03.11-12.20	*
2.2 HDi 120 (4HU (P22DTE))	Diesel	FWD	2198	88	120	04.06-12.16	*
2.2 HDi 130 (4HH (P22DTE))	Diesel	FWD	2198	96	131	04.06-	*
2.2 HDi 150 (4HJ (P22DTE))	Diesel	FWD	2198	110	150	03.11-	*
3.0 HDi 145 (F1CE3481N (F30DTE))	Diesel	FWD	2999	107	146	04.10-12.13	*
3.0 HDi 155 (F1CE0481D (F30DT))	Diesel	FWD	2999	115	156	04.06-12.15	*
3.0 HDi 160 (F1CE0481D (F30DT))	Diesel	FWD	2999	116	156	04.06-12.15	*
3.0 HDi 175 (F1CE3481E (F30DTE))	Diesel	FWD	2999	130	177	03.11-	*
RAM							
PROMASTER 1500 (VF1) 09.13-						**[CAMBIADO]:Furgón (LCVs-N1 Segment)**	
3.6	Gasolina	FWD	3604	209	284	09.13-	*
PROMASTER 2500 (VF2) 09.13-						**[CAMBIADO]:Furgón (LCVs-N1 Segment)**	
3.6	Gasolina	FWD	3604	209	284	09.13-	*
PROMASTER 3500 (VF3) 09.13-						**[CAMBIADO]:Furgón (LCVs-N1 Segment)**	
3.6	Gasolina	FWD	3604	209	284	09.13-	*
VAUXHALL							
MOVANO Mk III © (U9) 12.21-						**[CAMBIADO]:Furgón (LCVs-N1 Segment)**	
2.2 D	Diesel	FWD	2179	88	120	12.22-10.23	*
MOVANO Mk III © (U9) 12.21-						**Caja/Chasis (LCVs-N1 Segment)**	
2.2 D	Diesel	FWD	2179	121	165	12.22-10.23	*