LISTA DE APLICACIONES - BUYERS GUIDE

RB1729-701

8 424073 133953

Qty: 944 **Weight: 925**

O.E.M.	MAKE
16 114 567 80	PEUGEOT
16 114 572 80	CITROËN
16 172 724 80	PEUGEOT
4253.22	PEUGEOT
4253.25	CITROËN
4253.98	PEUGEOT
4253.99	CITROËN
4254.76	CITROËN
86 60 004 477	RENAULT
86 71 016 694	RENAULT
E172286	CITROËN

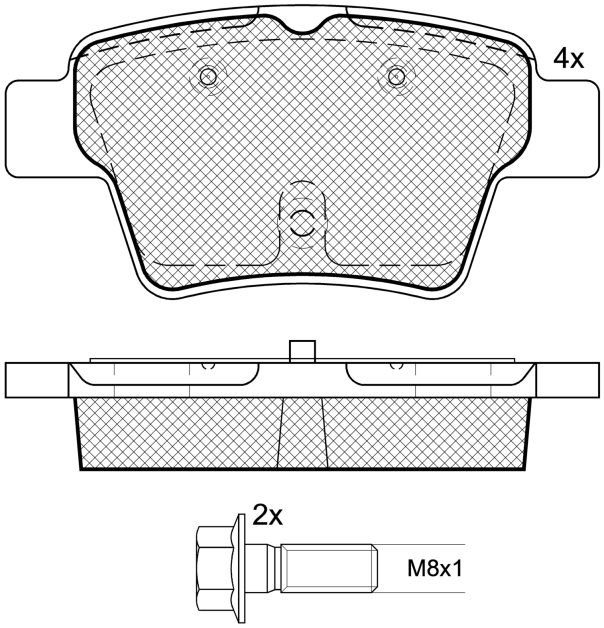

1 - Ref. 690059

RB1729-701

E 9 **90R-01110/1286**

Bosch

94.7x46.9x17.6

WVA	FMSI
24150	D1621-8833

Sin Filas

		Trac.	CC	Kw	CV		Front / Rear
AEOLUS							
AX3 11.18-							**SUV ()**
200T (DFMC10TD)	Gasolina	FWD	999	95	129	11.18-	*
1.6 (DFMA16)	Gasolina	FWD	1556	86	117	11.18-	*
CITROËN							
C4 (LC_) 11.04-12.14							**[CAMBIADO]:Fastback (Compact car-C Segment)**
1.4 16V (KFU (ET3J4))	Gasolina	FWD	1360	65	88	11.04-07.11	*
1.6 16V (NFU (TU5JP4))	Gasolina	FWD	1587	80	109	11.04-07.11	*
1.6 VTI 120 (5FW (EP6))	Gasolina	FWD	1598	88	120	07.08-07.11	*
1.6 THP 140 (5FT (EP6DT))	Gasolina	FWD	1598	103	140	07.08-07.11	*
1.6 THP 150 (5FX (EP6DT))	Gasolina	FWD	1598	110	150	07.08-07.11	*
2.0 16V (RFN (EW10J4))	Gasolina	FWD	1997	100	136	11.04-07.07	*
2.0 16V (RFJ (EW10A))	Gasolina	FWD	1997	103	140	11.04-07.11	*
2.0 16V (RFJ (EW10A))	Gasolina	FWD	1997	105	143	09.06-07.09	*
2.0 16V (RFK (EW10J4S))	Gasolina	FWD	1997	130	177	11.04-07.08	*
1.6 16V Bio-Flex (NFU (TU5JP4))	Gasol./Etanol	FWD	1587	80	109	09.07-07.08	*
1.6 Flex	Gasol./Etanol	FWD	1587	81	110	02.09-07.11	*
1.6 HDi (9HX (DV6ATED4))	Diesel	FWD	1560	66	90	11.04-07.11	*
1.6 HDi (9HY (DV6TED4))	Diesel	FWD	1560	80	109	11.04-07.11	*
1.6 HDi (9HZ (DV6TED4))	Diesel	FWD	1560	80	109	11.04-07.11	*
2.0 HDi (RHZ (DW10ATED))	Diesel	FWD	1997	81	110	04.07-07.08	*
2.0 HDi (RHR (DW10BTED4))	Diesel	FWD	1997	100	136	11.04-07.11	*
2.0 HDi (RHF (DW10BTED4))	Diesel	FWD	1997	103	140	07.08-07.11	*

LISTA DE APLICACIONES - BUYERS GUIDE

C4 (LA_) 11.04-12.13						**Coupé (Compact car-C Segment)**	
1.4 16V (KFU (ET3J4))	Gasolina	FWD	1360	65	88	11.04-07.11	*
1.6 16V (NFU (TU5JP4))	Gasolina	FWD	1587	80	109	11.04-07.11	*
1.6 VTI 120 (5FW (EP6))	Gasolina	FWD	1598	88	120	07.08-07.11	*
1.6 THP (5FT (EP6DT))	Gasolina	FWD	1598	103	140	06.08-07.11	*
1.6 THP 150 (5FX (EP6DT))	Gasolina	FWD	1598	110	150	07.08-07.11	*
2.0 16V (RFN (EW10J4))	Gasolina	FWD	1997	100	136	11.04-07.07	*
2.0 VTR (RFJ (EW10A))	Gasolina	FWD	1997	103	140	10.06-12.07	*
2.0 16V (RFK (EW10J4S))	Gasolina	FWD	1997	130	177	11.04-12.10	*
1.6 HDi (9HX (DV6ATED4))	Diesel	FWD	1560	66	90	11.04-07.11	*
1.6 HDi (9HY (DV6TED4))	Diesel	FWD	1560	80	109	11.04-07.11	*
1.6 HDi (9HZ (DV6TED4))	Diesel	FWD	1560	80	109	11.04-07.11	*
2.0 HDi (RHR (DW10BTED4))	Diesel	FWD	1997	100	136	11.04-12.10	*
2.0 HDi (RHF (DW10BTED4))	Diesel	FWD	1997	103	140	07.08-07.11	*
C4 (LR_) 02.05-12.10						**Furgón/hatchback (Compact car-C Segment)**	
2.0 HDi (RHR (DW10BTED4))	Diesel	FWD	1997	100	136	02.05-12.10	*
C4 / C4 PALLAS 07.06-						**Sedán (Compact car-C Segment)**	
1.6 16V (NFU (TU5JP4))	Gasolina	FWD	1587	80	109	07.06-07.11	*
2.0 16V (RFJ (EW10A))	Gasolina	FWD	1997	103	140	07.06-07.11	*
1.6 HDi (9HY (DV6TED4))	Diesel	FWD	1560	80	109	07.06-07.11	*
1.6 HDi (9HZ (DV6TED4))	Diesel	FWD	1560	80	109	07.06-07.11	*
CITROËN (DF-PSA)							
C-QUATRE 10.08-						**[CAMBIADO]:Fastback (Compact car-C Segment)**	
1.6	Gasolina	FWD	1587	86	117	04.13-	*
C-QUATRE 06.09-						**Sedán (Compact car-C Segment)**	
1.6	Gasolina	FWD	1587	86	117	04.13-	*
C-TRIOMPHE 05.06-12.12						**Sedán (Compact car-C Segment)**	
2.0 Exclusive Limousine	Gasolina	FWD	1997	103	140	05.06-	*
FENGXING							
T5 09.18-						**SUV ()**	
1.5 (4J15T)	Gasolina	FWD	1468	115	156	07.19-	*
1.5 230 T (4A91T)	Gasolina	FWD	1499	110	150	09.18-	*
1.6 (4A92)	Gasolina	FWD	1590	90	122	07.19-	*
1.6 300 T (CE16)	Gasolina	FWD	1598	150	204	09.18-	*
PEUGEOT							
207 (WA_, WC_) 02.06-						**[CAMBIADO]:Fastback (Supermini car-B Segment)**	
1.6 16V (NFU (TU5JP4))	Gasolina	FWD	1587	80	109	02.06-10.13	*
1.6 16V VTi (5FS (EP6C))	Gasolina	FWD	1598	88	120	02.07-12.12	*
1.6 16V VTi (5FW (EP6))	Gasolina	FWD	1598	88	120	02.07-12.12	*
1.6 16V VTi (EP6)	Gasolina	FWD	1598	88	120	02.07-12.12	*
1.6 16V Turbo (5FX (EP6DT))	Gasolina	FWD	1598	110	150	02.06-10.13	*
1.6 16V RC (5FY (EP6DTS))	Gasolina	FWD	1598	128	174	02.07-12.12	*
1.6 HDi (9HV (DV6TED4B))	Diesel	FWD	1560	66	90	02.06-10.13	*
1.6 HDi (9HV (DV6TED4BU))	Diesel	FWD	1560	66	90	02.06-10.13	*
1.6 HDi (9HX (DV6ATED4))	Diesel	FWD	1560	66	90	02.06-10.13	*
1.6 HDi (9HY (DV6TED4))	Diesel	FWD	1560	80	109	02.06-10.13	*
1.6 HDi (9HZ (DV6TED4))	Diesel	FWD	1560	80	109	02.06-10.13	*

LISTA DE APLICACIONES - BUYERS GUIDE

207 (WA_, WC_) 04.06-							**Furgón/hatchback (LCVs-N1 Segment)**
1.6 VTi (5FW (EP6))	Gasolina	FWD	1598	88	120	03.07-12.12	*
1.6 HDi (9HX (DV6ATED4))	Diesel	FWD	1560	66	90	04.07-10.12	*
1.6 HDi (9HZ (DV6TED4))	Diesel	FWD	1560	80	109	04.06-12.12	*
207 CC (WD_) 02.07-							**Cabrío (Supermini car-B Segment)**
1.6 16V (5FS (EP6C))	Gasolina	FWD	1598	88	120	02.07-10.13	*
1.6 16V (5FW (EP6))	Gasolina	FWD	1598	88	120	02.07-10.13	*
1.6 16V (EP6)	Gasolina	FWD	1598	88	120	02.07-10.13	*
1.6 16V Turbo (5FX (EP6DT))	Gasolina	FWD	1598	110	150	02.07-12.12	*
1.6 16V Turbo (5FR (EP6DT))	Gasolina	FWD	1598	115	156	10.09-12.13	*
1.6 16V Turbo (5FV (EP6CDT))	Gasolina	FWD	1598	115	156	10.09-12.13	*
1.6 HDi (9HZ (DV6TED4))	Diesel	FWD	1560	80	109	02.07-01.15	*
207 SW (WK_) 02.07-							**[CAMBIADO]:Break (Supermini car-B Segment)**
1.6 16V (5FS (EP6C))	Gasolina	FWD	1598	88	120	06.07-10.13	*
1.6 16V (5FW (EP6))	Gasolina	FWD	1598	88	120	06.07-10.13	*
1.6 16V (EP6)	Gasolina	FWD	1598	88	120	06.07-10.13	*
1.6 16V Turbo (5FX (EP6DT))	Gasolina	FWD	1598	110	150	02.07-12.12	*
1.6 16V RC (5FY (EP6DTS))	Gasolina	FWD	1598	128	174	02.07-12.12	*
1.6 HDi (9HV (DV6TED4B))	Diesel	FWD	1560	66	90	06.07-12.12	*
1.6 HDi (9HV (DV6TED4BU))	Diesel	FWD	1560	66	90	06.07-12.12	*
1.6 HDi (9HZ (DV6TED4))	Diesel	FWD	1560	80	109	06.07-12.12	*
207 SW (WK_) 08.07-12.12							**[CAMBIADO]:Furgón/Break (Supermini car-B Segment)**
1.6 HDi (9HX (DV6ATED4))	Diesel	FWD	1560	66	90	08.07-12.12	*
1.6 HDi (9HZ (DV6TED4))	Diesel	FWD	1560	80	109	08.07-12.12	*
307 (3E) 03.02-							**[CAMBIADO]:Break (Compact car-C Segment)**
1.4 (KFW (TU3JP))	Gasolina	FWD	1360	55	75	04.02-09.03	*
1.4 16V (KFU (ET3J4))	Gasolina	FWD	1360	65	88	11.03-07.07	*
1.6 16V (NFU (TU5JP4))	Gasolina	FWD	1587	80	109	03.02-04.08	*
2.0 (RFN (EW10J4))	Gasolina	FWD	1997	100	136	03.02-06.05	*
2.0 16V (RFJ (EW10A))	Gasolina	FWD	1997	103	140	03.05-04.08	*
2.0 16V (RFK (EW10J4S))	Gasolina	FWD	1997	130	177	06.05-04.08	*
1.6 BioFlex (NFU (TU5JP4))	Gasol./Etanol	FWD	1587	80	109	09.07-04.08	*
1.4 HDi (8HZ (DV4TD))	Diesel	FWD	1398	50	68	03.02-06.05	*
1.6 HDi (9HV (DV6TED4B))	Diesel	FWD	1560	66	90	04.05-04.08	*
1.6 HDi (9HV (DV6TED4BU))	Diesel	FWD	1560	66	90	04.05-04.08	*
1.6 HDi (9HX (DV6ATED4))	Diesel	FWD	1560	66	90	04.05-04.08	*
1.6 HDi (9HX (DV6AUTED4))	Diesel	FWD	1560	66	90	04.05-04.08	*
1.6 HDi 110 (9HY (DV6TED4))	Diesel	FWD	1560	80	109	02.04-04.08	*
1.6 HDi 110 (9HZ (DV6TED4))	Diesel	FWD	1560	80	109	02.04-04.08	*
2.0 HDI 90 (RHY (DW10TD))	Diesel	FWD	1997	66	90	03.02-04.08	*
2.0 HDI 110 (RHS (DW10ATED))	Diesel	FWD	1997	79	107	03.02-12.09	*
2.0 HDi 135 (RHR (DW10BTED4))	Diesel	FWD	1997	100	136	02.04-04.08	*
307 (3A/C) 08.00-							**[CAMBIADO]:Fastback (Compact car-C Segment)**
1.4 (KFW (TU3JP))	Gasolina	FWD	1360	55	75	08.00-09.03	*
1.4 16V (KFU (ET3J4))	Gasolina	FWD	1360	65	88	11.03-07.07	*
1.6 16V (NFU (TU5JP4))	Gasolina	FWD	1587	80	109	08.00-11.07	*
1.6 (NFU (TU5JP4))	Gasolina	FWD	1587	81	110	07.06-04.12	*
2.0 16V (RFN (EW10J4))	Gasolina	FWD	1997	100	136	08.00-06.05	*

2.0 16V (RFJ (EW10A))	Gasolina	FWD	1997	103	140	03.05-11.07	*
2.0 (RFJ (EW10A))	Gasolina	FWD	1997	105	143	08.08-12.11	*
2.0 (RFN (EW10J4))	Gasolina	FWD	1997	105	143	08.08-12.11	*
2.0 16V (RFK (EW10J4S))	Gasolina	FWD	1997	130	177	06.05-11.07	*
1.6 BioFlex (NFU (TU5JP4))	Gasol./Etanol	FWD	1587	80	109	09.07-04.09	*
1.6 Flex (N6A (TU5JP4))	Gasol./Etanol	FWD	1587	83	113	07.06-12.12	*
1.4 HDi (8HX (DV4TD))	Diesel	FWD	1398	50	68	10.01-06.05	*
1.4 HDi (8HZ (DV4TD))	Diesel	FWD	1398	50	68	10.01-06.05	*
1.6 HDi (9HV (DV6TED4B))	Diesel	FWD	1560	66	90	04.05-03.09	*
1.6 HDi (9HV (DV6TED4BU))	Diesel	FWD	1560	66	90	04.05-03.09	*
1.6 HDi (9HX (DV6ATED4))	Diesel	FWD	1560	66	90	04.05-03.09	*
1.6 HDi 110 (9HY (DV6TED4))	Diesel	FWD	1560	80	109	02.04-03.09	*
1.6 HDi 110 (9HZ (DV6TED4))	Diesel	FWD	1560	80	109	02.04-03.09	*
2.0 HDI 90 (RHY (DW10TD))	Diesel	FWD	1997	66	90	08.00-03.07	*
2.0 HDI 110 (RHS (DW10ATED))	Diesel	FWD	1997	79	107	08.00-03.07	*
2.0 HDi 135 (RHR (DW10BTED4))	Diesel	FWD	1997	100	136	10.03-11.07	*
307 (3B) 03.03-06.09				**Cabrío (Compact car-C Segment)**			
1.6 16V (NFU (TU5JP4))	Gasolina	FWD	1587	80	110	03.03-04.09	*
2.0 16V (RFN (EW10J4))	Gasolina	FWD	1997	100	136	10.03-06.05	*
2.0 16V (RFJ (EW10A))	Gasolina	FWD	1997	103	140	12.04-04.09	*
2.0 16V	Gasolina	FWD	1997	105	143	10.05-04.09	*
2.0 16V (RFK (EW10J4S))	Gasolina	FWD	1997	130	177	10.03-04.09	*
2.0 16V (RFK (EW10J4S))	Gasolina	FWD	1997	132	180	04.05-06.09	*
2.0 HDi 135 (RHR (DW10BTED4))	Diesel	FWD	1997	100	136	06.05-04.09	*
307 01.01-				**Sedán (Compact car-C Segment)**			
1.6	Gasolina	FWD	1587	81	110	08.06-12.12	*
1.6 Flex	Gasolina	FWD	1587	81	110	08.06-	*
1.6 Flex	Gasolina	FWD	1587	83	113	08.06-	*
2.0	Gasolina	FWD	1997	105	143	03.04-04.09	*
2.0 Flex	Gasolina	FWD	1997	105	143	08.08-	*
2.0 Flex	Gasolina	FWD	1997	111	151	12.07-	*
2.0 HDi	Diesel	RWD	1997	66	90	09.06-10.10	*
2.0 HDi	Diesel	FWD	1997	80	109	09.06-03.12	*
307 SW (3H) 03.02-				**[CAMBIADO]:Break (Compact car-C Segment)**			
1.4 (KFW (TU3JP))	Gasolina	FWD	1360	55	75	04.02-09.03	*
1.4 16V (KFU (ET3J4))	Gasolina	FWD	1360	65	88	11.03-07.07	*
1.6 16V (NFU (TU5JP4))	Gasolina	FWD	1587	80	109	03.02-04.08	*
2.0 16V (RFN (EW10J4))	Gasolina	FWD	1997	100	136	03.02-06.05	*
2.0 16V (RFJ (EW10A))	Gasolina	FWD	1997	103	140	03.05-04.08	*
1.6 BioFlex (NFU (TU5JP4))	Gasol./Etanol	FWD	1587	80	109	09.07-04.08	*
1.4 HDi 70	Diesel	FWD	1398	50	68	03.02-06.05	*
1.4 HDi	Diesel	RWD	1398	51	69	04.02-06.05	*
1.6 HDi 90 (9HV (DV6TED4B))	Diesel	FWD	1560	66	90	04.05-04.08	*
1.6 HDi 90 (9HV (DV6TED4BU))	Diesel	FWD	1560	66	90	04.05-04.08	*
1.6 HDi 90 (9HX (DV6ATED4))	Diesel	FWD	1560	66	90	04.05-04.08	*
1.6 HDi 90 (9HX (DV6AUTED4))	Diesel	FWD	1560	66	90	04.05-04.08	*
1.6 HDi 110 (9HY (DV6TED4))	Diesel	FWD	1560	80	109	11.03-12.07	*
1.6 HDi 110 (9HZ (DV6TED4))	Diesel	FWD	1560	80	109	11.03-12.07	*
2.0 HDI 90 (RHY (DW10TD))	Diesel	FWD	1997	66	90	03.02-04.08	*

2.0 HDI 110 (RHS (DW10ATED))	Diesel	FWD	1997	79	107	03.02-12.09	*
2.0 HDi 135 (RHR (DW10BTED4))	Diesel	FWD	1997	100	136	02.04-04.08	*
307 SW (3E_, 3H_) 04.02-12.09						**[CAMBIADO]:Furgón/Break (Compact car-C Segment)**	
1.4 HDi (8HZ (DV4TD))	Diesel	FWD	1398	51	69	04.02-06.05	*
1.6 HDi (9HX (DV6ATED4))	Diesel	FWD	1560	66	90	04.06-10.08	*
2.0 HDi (RHY (DW10TD))	Diesel	FWD	1997	66	90	04.03-04.08	*
2.0 HDi (RHZ (DW10ATED))	Diesel	FWD	1997	79	107	01.03-12.09	*
2.0 HDi (RHR (DW10BTED4))	Diesel	FWD	1997	100	136	04.04-11.07	*
PEUGEOT (DF-PSA)							
307 08.04-12.14						**Sedán (Compact car-C Segment)**	
1.6	Gasolina	FWD	1587	78	105	08.04-	*
2.0	Gasolina	FWD	1997	99	133	08.04-	*
2.0	Gasolina	FWD	1997	108	145	08.04-	*