LISTA DE APLICACIONES - BUYERS GUIDE

RB1159-396

8 424073 205476

Qty: 300 Weight: 1.976

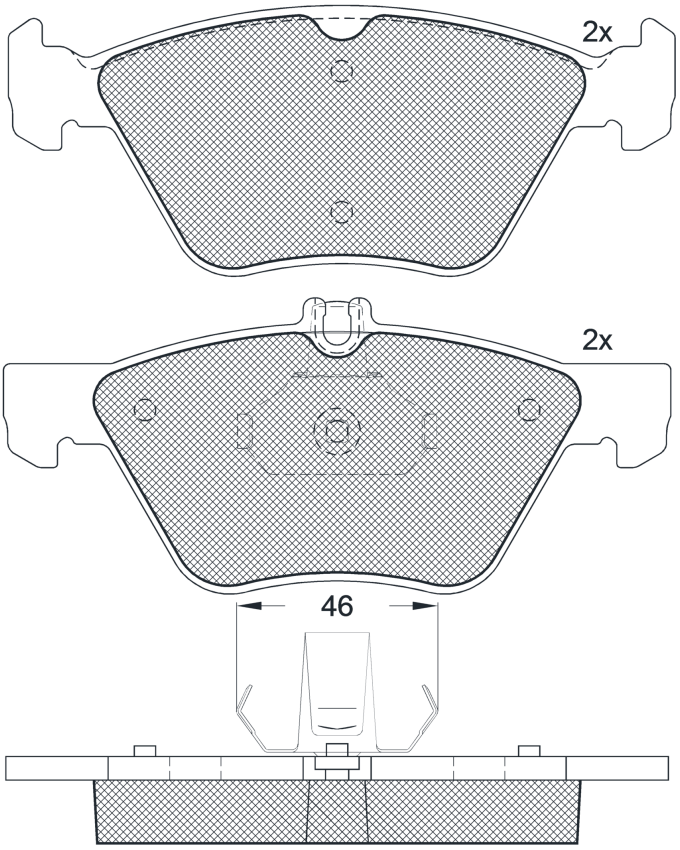

RB1159-396

E1 90R-01101/204

Ate - Teves

156.4x63.7x20.3
156.5x69.4x20.3

WVA	FMSI
21670	D740-7609
21671	
21940	

Sin Filas

			Trac.	CC	Kw	CV		Front / Rear
MERCEDES-BENZ								
CLK-Class (A208) 03.98-03.02							**Cabrío (Executive car-E Segment)**	
CLK 200 Kompressor (208.445) (M 111.956)	Gasolina	RWD	1998	120	163	06.00-03.02	*	
CLK 200 Kompressor (208.445) (M 111.944)	Gasolina	RWD	1998	141	192	03.98-06.00	*	
CLK 230 Kompressor (208.448) (M 111.973)	Gasolina	RWD	2295	142	193	03.98-06.00	*	
CLK 230 Kompressor (208.448) (M 111.975)	Gasolina	RWD	2295	142	193	03.98-06.00	*	
CLK 230 Kompressor (208.448) (M 111.982)	Gasolina	RWD	2295	145	197	06.00-03.02	*	
CLK 320 (208.465) (M 112.940)	Gasolina	RWD	3199	160	218	03.98-03.02	*	
CLK-Class (C208) 06.97-12.03							**Coupé (Executive car-E Segment)**	
CLK 320 (208.365) (M 112.940)	Gasolina	RWD	3199	160	218	06.97-06.02	*	
E-Class II (VF210) 06.96-03.03							**Caja/Chasis (LCVs-N1 Segment)**	
E 280 (210.663) (M 112.921)	Gasolina	RWD	2799	150	204	07.99-11.02	*	
E 220 CDi (210.606) (OM 611.961)	Diesel	RWD	2148	105	143	07.99-12.02	*	
E 250 d (210.610) (OM 605.912)	Diesel	RWD	2497	83	113	06.96-06.98	*	
E 270 CDI (210.616) (OM 612.961)	Diesel	RWD	2685	125	170	07.99-12.02	*	
E 290 TD (210.617) (OM 602.982)	Diesel	RWD	2874	95	129	07.96-07.99	*	
E-Class II (W210) 06.95-08.03							**Sedán (Executive car-E Segment)**	
E 200 Kompressor (210.048) (M 111.947)	Gasolina	RWD	1998	137	186	06.97-03.02	*	
E 240 (210.061) (M 112.911)	Gasolina	RWD	2398	125	170	06.97-08.00	*	
E 280 (210.053) (M 104.945)	Gasolina	RWD	2799	142	193	01.96-06.97	*	
E 280 (210.063) (M 112.921)	Gasolina	RWD	2799	150	204	12.96-03.02	*	
E 280 4-matic (210.081) (M 112.921)	Gasolina	4WD	2799	150	204	12.96-03.02	*	
E 320 (210.055) (M 104.995)	Gasolina	RWD	3199	162	220	06.95-06.97	*	
E 320 (210.065) (M 112.941)	Gasolina	RWD	3199	165	224	06.97-03.02	*	

E 320 4-matic (210.082) (M 112.941)	Gasolina	4WD	3199	165	224	06.97-03.02	*
E 36 AMG	Gasolina	RWD	3606	200	272	04.96-01.98	*
E 420 (210.072) (M 119.985)	Gasolina	RWD	4196	205	279	01.96-06.97	*
E 430 (210.070) (M 113.940)	Gasolina	RWD	4266	205	279	06.97-03.02	*
E 270 CDI (210.016) (OM 612.961)	Diesel	RWD	2685	120	163	07.99-03.02	*
E 270 CDI (210.016) (OM 612.961)	Diesel	RWD	2685	125	170	07.99-03.02	*
E 300 Turbo-D (210.025) (OM 606.962)	Diesel	RWD	2996	130	177	12.96-07.99	*
E 320 CDI (210.026) (OM 613.961)	Diesel	RWD	3222	145	197	07.99-03.02	*
E-Class II T-Model (S210) 06.96-03.03				**[CAMBIADO]:Break (Executive car-E Segment)**			
E 200 T Kompressor (210.248) (M 111.947)	Gasolina	RWD	1998	137	186	06.97-03.03	*
E 240 T (210.261) (M 112.911)	Gasolina	RWD	2398	125	170	06.97-03.03	*
E 280 T (210.263) (M 112.921)	Gasolina	RWD	2799	150	204	12.96-03.03	*
E 280 T 4-matic (210.281) (M 112.921)	Gasolina	4WD	2799	150	204	12.96-03.03	*
E 320 T (210.265) (M 112.941)	Gasolina	RWD	3199	165	224	12.96-03.03	*
E 320 T 4-matic (210.282) (M 112.941)	Gasolina	4WD	3199	165	224	12.96-03.03	*
E 420 T (210.272) (M 119.985)	Gasolina	RWD	4196	205	279	06.96-06.97	*
E 430 T (210.270) (M 113.940)	Gasolina	RWD	4266	205	279	06.97-03.03	*
E 250 T D (210.210) (OM 605.912)	Diesel	RWD	2497	83	113	06.96-07.99	*
E 270 T CDI (OM 612.961)	Diesel	RWD	2685	120	163	02.00-03.03	*
E 270 T CDI (210.216) (OM 612.961)	Diesel	RWD	2685	125	170	07.99-03.03	*
E 290 T Turbo-D (210.217) (OM 602.982)	Diesel	RWD	2874	95	129	06.96-07.99	*
E 300 T Turbo-D (210.225) (OM 606.962)	Diesel	RWD	2996	130	177	12.96-07.99	*
E 320 T CDI (210.226) (OM 613.961)	Diesel	RWD	3222	145	197	07.99-03.03	*
SLK-Class (R170) 04.96-04.04				**Cabrío (Sports car-S Segment)**			
320 (170.465) (M 112.947)	Gasolina	RWD	3199	160	218	03.00-04.04	*