LISTA DE APLICACIONES - BUYERS GUIDE

RB1102-046

8 424073 126368

Qty: 300 Weight: 1.151

O.E.M.	MAKE
2D0 698 451 A	VW
2D0 698 451 C	VW
2D0 698 451 D	VW

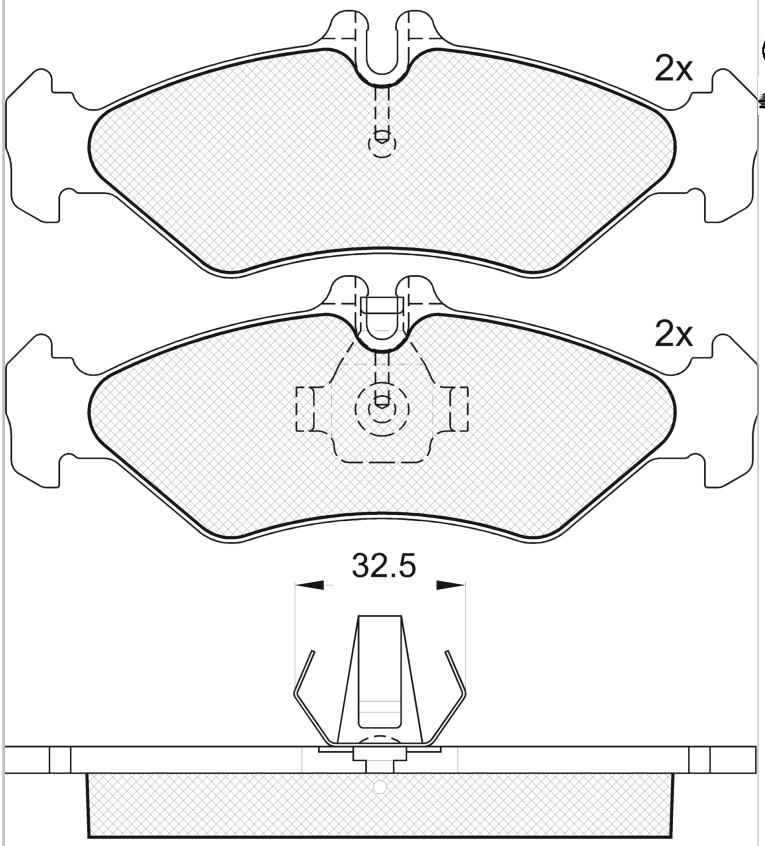

RB1102-046

E1 90R-01101/191

Ate - Teves

141.4x50.1x17

WVA	FMSI
21621	D951-7850
21622	

Sin Filas

		Trac.	CC	Kw	CV		Front / Rear
VW							
LT 28-35 (2DB, 2DE, 2DK) 04.96-07.06						**Bus (Minibus-M2-Segment)**	
2.3 (AGL)	Gasolina	RWD	2295	105	143	05.96-07.06	*
2.5 SDI (AGX)	Diesel	RWD	2461	55	75	07.96-07.06	*
2.5 TDI (BBE)	Diesel	RWD	2461	61	83	05.01-07.06	*
2.5 TDI (APA)	Diesel	RWD	2461	66	90	05.99-07.06	*
2.5 TDI (BBF)	Diesel	RWD	2461	70	95	05.01-07.06	*
2.5 TDI (AHD)	Diesel	RWD	2461	75	102	05.96-08.99	*
2.5 TDI (ANJ)	Diesel	RWD	2461	80	109	05.99-07.06	*
2.5 TDI (AVR)	Diesel	RWD	2461	80	109	05.99-07.06	*
2.8 TDI (AGK)	Diesel	RWD	2798	92	125	07.97-05.03	*
2.8 TDI (ATA)	Diesel	RWD	2798	96	131	01.99-01.02	*
2.8 TDI (AUH)	Diesel	RWD	2799	116	158	05.01-06.06	*
2.8 TDI (BCQ)	Diesel	RWD	2799	116	158	05.01-06.06	*
LT 28-46 (2DA, 2DD, 2DH) 04.96-07.06						**[CAMBIADO]:Furgón (LCVs-N1 Segment)**	
2.3 (AGL)	Gasolina	RWD	2295	105	143	05.96-07.06	*
2.5 SDI (AGX)	Diesel	RWD	2461	55	75	09.96-07.06	*
2.5 TDI (BBE)	Diesel	RWD	2461	61	83	05.01-07.06	*
2.5 TDI (APA)	Diesel	RWD	2461	66	90	05.99-07.06	*
2.5 TDI (BBF)	Diesel	RWD	2461	70	95	05.01-07.06	*
2.5 TDI (AHD)	Diesel	RWD	2461	75	102	05.96-08.99	*
2.5 TDI (ANJ)	Diesel	RWD	2461	80	109	05.99-07.06	*
2.5 TDI (AVR)	Diesel	RWD	2461	80	109	05.99-07.06	*
2.8 TDI (AGK)	Diesel	RWD	2799	92	125	07.97-01.02	*

2.8 TDI (ATA)	Diesel	RWD	2799	96	130	01.99-07.06	*
2.8 TDI (AUH)	Diesel	RWD	2799	116	158	04.02-07.06	*
2.8 TDI (BCQ)	Diesel	RWD	2799	116	158	04.02-07.06	*
LT 28-46 (2DC, 2DF, 2DG, 2DL, 2DM) 04.96-07.06						**Caja/Chasis (LCVs-N1 Segment)**	
2.3 (AGL)	Gasolina	RWD	2295	105	143	06.96-07.06	*
2.5 SDI (AGX)	Diesel	RWD	2461	55	75	09.96-07.06	*
2.5 TDI (BBE)	Diesel	RWD	2461	61	83	05.01-07.06	*
2.5 TDI (APA)	Diesel	RWD	2461	66	90	05.99-07.06	*
2.5 TDI (BBF)	Diesel	RWD	2461	70	95	05.01-07.06	*
2.5 TDI (AHD)	Diesel	RWD	2461	75	102	06.96-08.99	*
2.5 TDI (ANJ)	Diesel	RWD	2461	80	109	05.99-07.06	*
2.5 TDI (AVR)	Diesel	RWD	2461	80	109	05.99-07.06	*
2.8 TDI (AGK)	Diesel	RWD	2799	92	125	07.97-01.02	*
2.8 TDI (ATA)	Diesel	RWD	2799	96	130	01.99-07.06	*
2.8 TDI (AUH)	Diesel	RWD	2799	116	158	04.02-07.06	*