LISTA DE APLICACIONES - BUYERS GUIDE

3R13495603

Weight: 14.010

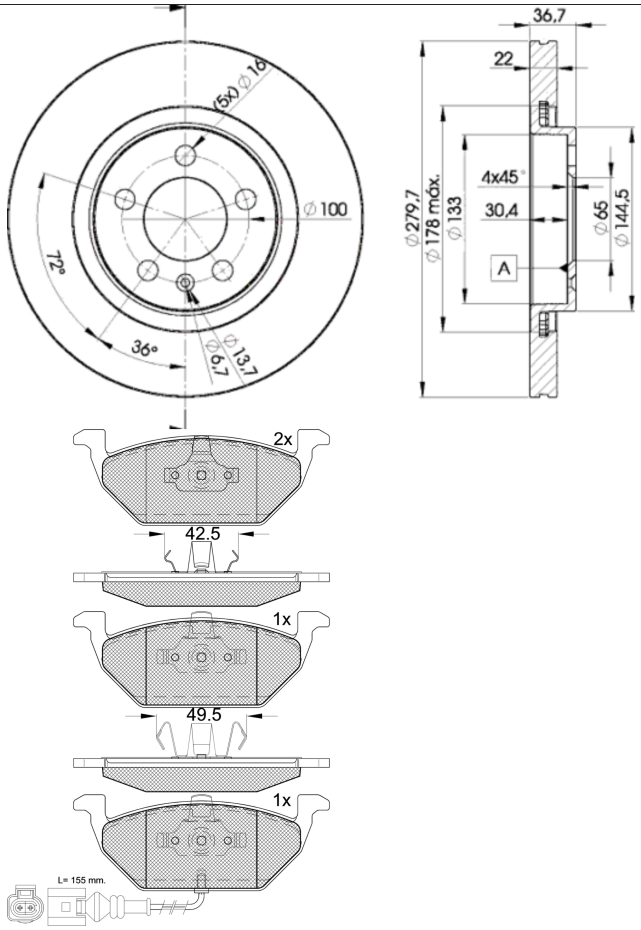

3R13495603

Ate - Teves

146x54.7x19.6
Ø280x22x36.5

WVA
23131

Sin Filas

	Trac.	CC	Kw	CV		Front / Rear

AUDI

A3 (8L1) 09.96-09.06						[CAMBIADO]:Fastback (Compact executive car-D Segment)	
1.6 (AVU)	Gasolina	FWD	1595	75	102	08.00-05.03	*
1.6 (AVU)	Gasolina	FWD	1595	75	102	08.00-05.03	*
1.6 (BFQ)	Gasolina	FWD	1595	75	102	08.00-05.03	*
1.6 (BFQ)	Gasolina	FWD	1595	75	102	08.00-05.03	*
1.8 (AGN)	Gasolina	FWD	1781	92	125	09.96-05.03	*
1.8 (AGN)	Gasolina	FWD	1781	92	125	09.96-05.03	*
1.8 (APG)	Gasolina	FWD	1781	92	125	09.96-05.03	*
1.8 (APG)	Gasolina	FWD	1781	92	125	09.96-05.03	*
1.9 TDI (AGR)	Diesel	FWD	1896	66	90	09.96-07.01	*
1.9 TDI (AGR)	Diesel	FWD	1896	66	90	09.96-07.01	*
1.9 TDI (ALH)	Diesel	FWD	1896	66	90	09.96-07.01	*
1.9 TDI (ALH)	Diesel	FWD	1896	66	90	09.96-07.01	*
1.9 TDI (AHF)	Diesel	FWD	1896	81	110	08.97-07.01	*
1.9 TDI (AHF)	Diesel	FWD	1896	81	110	08.97-07.01	*
1.9 TDI (ASV)	Diesel	FWD	1896	81	110	08.97-07.01	*
1.9 TDI (ASV)	Diesel	FWD	1896	81	110	08.97-07.01	*

SEAT

LEON (1M1) 11.99-06.06						[CAMBIADO]:Fastback (Compact car-C Segment)	
1.6 (AEH)	Gasolina	FWD	1595	74	100	11.99-06.06	*
1.6 (AEH)	Gasolina	FWD	1595	74	100	11.99-06.06	*
1.6 (AKL)	Gasolina	FWD	1595	74	100	11.99-06.06	*
1.6 (AKL)	Gasolina	FWD	1595	74	100	11.99-06.06	*

1.8 20V (AGN)	Gasolina	FWD	1781	92	125	11.99-06.06	*
1.8 20V (AGN)	Gasolina	FWD	1781	92	125	11.99-06.06	*
1.8 20V (APG)	Gasolina	FWD	1781	92	125	11.99-06.06	*
1.8 20V (APG)	Gasolina	FWD	1781	92	125	11.99-06.06	*
1.9 SDI (AQM)	Diesel	FWD	1896	50	68	11.99-06.06	*
1.9 SDI (AQM)	Diesel	FWD	1896	50	68	11.99-06.06	*
1.9 TDI (AGR)	Diesel	FWD	1896	66	90	11.99-06.06	*
1.9 TDI (AGR)	Diesel	FWD	1896	66	90	11.99-06.06	*
1.9 TDI (ALH)	Diesel	FWD	1896	66	90	11.99-06.06	*
1.9 TDI (ALH)	Diesel	FWD	1896	66	90	11.99-06.06	*
1.9 TDI (AXR)	Diesel	FWD	1896	74	100	10.05-06.06	*
1.9 TDI (AXR)	Diesel	FWD	1896	74	100	10.05-06.06	*
1.9 TDI (AHF)	Diesel	FWD	1896	81	110	11.99-06.06	*
1.9 TDI (AHF)	Diesel	FWD	1896	81	110	11.99-06.06	*
1.9 TDI (ASV)	Diesel	FWD	1896	81	110	11.99-06.06	*
1.9 TDI (ASV)	Diesel	FWD	1896	81	110	11.99-06.06	*
TOLEDO II (1M2) 10.98-05.06				**Sedán (Compact car-C Segment)**			
1.8 20V (AGN)	Gasolina	FWD	1781	92	125	10.98-07.04	*
1.8 20V (AGN)	Gasolina	FWD	1781	92	125	10.98-07.04	*
1.8 20V (APG)	Gasolina	FWD	1781	92	125	10.98-07.04	*
1.8 20V (APG)	Gasolina	FWD	1781	92	125	10.98-07.04	*
1.9 TDI (AGR)	Diesel	FWD	1896	66	90	03.99-07.04	*
1.9 TDI (AGR)	Diesel	FWD	1896	66	90	03.99-07.04	*
1.9 TDI (ALH)	Diesel	FWD	1896	66	90	03.99-07.04	*
1.9 TDI (ALH)	Diesel	FWD	1896	66	90	03.99-07.04	*
1.9 TDI (AXR)	Diesel	FWD	1896	74	101	08.05-05.06	*
1.9 TDI (AXR)	Diesel	FWD	1896	74	101	08.05-05.06	*
1.9 TDI (AHF)	Diesel	FWD	1896	81	110	10.98-07.04	*
1.9 TDI (AHF)	Diesel	FWD	1896	81	110	10.98-07.04	*
1.9 TDI (ASV)	Diesel	FWD	1896	81	110	10.98-07.04	*
1.9 TDI (ASV)	Diesel	FWD	1896	81	110	10.98-07.04	*
SKODA							
OCTAVIA (1U2) 09.96-12.10				**[CAMBIADO]:Fastback (Compact car-C Segment)**			
1.4 16V (AXP)	Gasolina	FWD	1390	55	75	09.00-12.10	*
1.4 16V (AXP)	Gasolina	FWD	1390	55	75	09.00-12.10	*
1.4 16V (BCA)	Gasolina	FWD	1390	55	75	09.00-12.10	*
1.4 16V (BCA)	Gasolina	FWD	1390	55	75	09.00-12.10	*
1.4 (AMD)	Gasolina	FWD	1397	44	60	04.99-03.01	*
1.4 (AMD)	Gasolina	FWD	1397	44	60	04.99-03.01	*
1.6 (AEH)	Gasolina	FWD	1595	74	101	02.97-12.07	*
1.6 (AEH)	Gasolina	FWD	1595	74	101	02.97-12.07	*
1.6 (AKL)	Gasolina	FWD	1595	74	101	02.97-12.07	*
1.6 (AKL)	Gasolina	FWD	1595	74	101	02.97-12.07	*
1.6 (AVU)	Gasolina	FWD	1595	75	102	11.00-12.10	*
1.6 (AVU)	Gasolina	FWD	1595	75	102	11.00-12.10	*
1.6 (BFQ)	Gasolina	FWD	1595	75	102	11.00-12.10	*
1.6 (BFQ)	Gasolina	FWD	1595	75	102	11.00-12.10	*
2.0 (AEG)	Gasolina	FWD	1984	85	116	04.99-05.07	*
2.0 (AEG)	Gasolina	FWD	1984	85	116	04.99-05.07	*
2.0 (APK)	Gasolina	FWD	1984	85	116	04.99-05.07	*

2.0 (APK)	Gasolina	FWD	1984	85	116	04.99-05.07	*
2.0 (AQY)	Gasolina	FWD	1984	85	116	04.99-05.07	*
2.0 (AQY)	Gasolina	FWD	1984	85	116	04.99-05.07	*
2.0 (AZH)	Gasolina	FWD	1984	85	116	04.99-05.07	*
2.0 (AZH)	Gasolina	FWD	1984	85	116	04.99-05.07	*
2.0 (AZJ)	Gasolina	FWD	1984	85	116	04.99-05.07	*
2.0 (AZJ)	Gasolina	FWD	1984	85	116	04.99-05.07	*
1.9 SDI (AGP)	Diesel	FWD	1896	50	68	06.97-12.03	*
1.9 SDI (AGP)	Diesel	FWD	1896	50	68	06.97-12.03	*
1.9 SDI (AQM)	Diesel	FWD	1896	50	68	06.97-12.03	*
1.9 SDI (AQM)	Diesel	FWD	1896	50	68	06.97-12.03	*
1.9 TDI (AGR)	Diesel	FWD	1896	66	90	09.96-03.10	*
1.9 TDI (AGR)	Diesel	FWD	1896	66	90	09.96-03.10	*
1.9 TDI (ALH)	Diesel	FWD	1896	66	90	09.96-03.10	*
1.9 TDI (ALH)	Diesel	FWD	1896	66	90	09.96-03.10	*
1.9 TDI (AXR)	Diesel	FWD	1896	74	100	10.05-12.10	*
1.9 TDI (AXR)	Diesel	FWD	1896	74	100	10.05-12.10	*
1.9 TDI (AHF)	Diesel	FWD	1896	81	110	08.97-01.06	*
1.9 TDI (AHF)	Diesel	FWD	1896	81	110	08.97-01.06	*
1.9 TDI (ASV)	Diesel	FWD	1896	81	110	08.97-01.06	*
1.9 TDI (ASV)	Diesel	FWD	1896	81	110	08.97-01.06	*
1.9 TDI (ASZ)	Diesel	FWD	1896	96	130	09.02-09.04	*
1.9 TDI (ASZ)	Diesel	FWD	1896	96	130	09.02-09.04	*
OCTAVIA (1U5) 08.00-03.10						**[CAMBIADO]:Furgón/Break (Compact car-C Segment)**	
1.9 D (AQM)	Diesel	FWD	1896	50	68	08.00-12.03	*
1.9 D (AQM)	Diesel	FWD	1896	50	68	08.00-12.03	*
1.9 TDI (ALH)	Diesel	FWD	1896	66	90	08.00-03.10	*
1.9 TDI (ALH)	Diesel	FWD	1896	66	90	08.00-03.10	*
OCTAVIA Combi (1U5) 07.98-12.10						**[CAMBIADO]:Break (Compact car-C Segment)**	
1.4 16V (AXP)	Gasolina	FWD	1390	55	75	08.00-12.10	*
1.4 16V (AXP)	Gasolina	FWD	1390	55	75	08.00-12.10	*
1.4 16V (BCA)	Gasolina	FWD	1390	55	75	08.00-12.10	*
1.4 16V (BCA)	Gasolina	FWD	1390	55	75	08.00-12.10	*
1.6 (AEH)	Gasolina	FWD	1595	74	101	07.98-12.07	*
1.6 (AEH)	Gasolina	FWD	1595	74	101	07.98-12.07	*
1.6 (AKL)	Gasolina	FWD	1595	74	101	07.98-12.07	*
1.6 (AKL)	Gasolina	FWD	1595	74	101	07.98-12.07	*
1.6 (AVU)	Gasolina	FWD	1595	75	102	09.00-12.10	*
1.6 (AVU)	Gasolina	FWD	1595	75	102	09.00-12.10	*
1.6 (BFQ)	Gasolina	FWD	1595	75	102	09.00-12.10	*
1.6 (BFQ)	Gasolina	FWD	1595	75	102	09.00-12.10	*
2.0 (AEG)	Gasolina	FWD	1984	85	116	04.99-05.07	*
2.0 (AEG)	Gasolina	FWD	1984	85	116	04.99-05.07	*
2.0 (APK)	Gasolina	FWD	1984	85	116	04.99-05.07	*
2.0 (APK)	Gasolina	FWD	1984	85	116	04.99-05.07	*
2.0 (AQY)	Gasolina	FWD	1984	85	116	04.99-05.07	*
2.0 (AQY)	Gasolina	FWD	1984	85	116	04.99-05.07	*
2.0 (AZH)	Gasolina	FWD	1984	85	116	04.99-05.07	*
2.0 (AZH)	Gasolina	FWD	1984	85	116	04.99-05.07	*
2.0 (AZJ)	Gasolina	FWD	1984	85	116	04.99-05.07	*

2.0 (AZJ)	Gasolina	FWD	1984	85	116	04.99-05.07	*
2.0 4x4 (AZH)	Gasolina	4WD	1984	85	116	08.00-09.04	*
2.0 4x4 (AZH)	Gasolina	4WD	1984	85	116	08.00-09.04	*
2.0 4x4 (AZJ)	Gasolina	4WD	1984	85	116	08.00-09.04	*
2.0 4x4 (AZJ)	Gasolina	4WD	1984	85	116	08.00-09.04	*
2.0 4x4 (ATF)	Gasolina	4WD	1984	88	120	01.00-12.10	*
2.0 4x4 (ATF)	Gasolina	4WD	1984	88	120	01.00-12.10	*
1.9 SDI (AGP)	Diesel	FWD	1896	50	68	07.98-12.03	*
1.9 SDI (AGP)	Diesel	FWD	1896	50	68	07.98-12.03	*
1.9 SDI (AQM)	Diesel	FWD	1896	50	68	07.98-12.03	*
1.9 SDI (AQM)	Diesel	FWD	1896	50	68	07.98-12.03	*
1.9 TDI (AGR)	Diesel	FWD	1896	66	90	07.98-03.10	*
1.9 TDI (AGR)	Diesel	FWD	1896	66	90	07.98-03.10	*
1.9 TDI (ALH)	Diesel	FWD	1896	66	90	07.98-03.10	*
1.9 TDI (ALH)	Diesel	FWD	1896	66	90	07.98-03.10	*
1.9 TDI (AXR)	Diesel	FWD	1896	74	100	08.00-12.10	*
1.9 TDI (AXR)	Diesel	FWD	1896	74	100	08.00-12.10	*
1.9 TDI 4x4 (ATD)	Diesel	4WD	1896	74	100	09.00-01.06	*
1.9 TDI 4x4 (ATD)	Diesel	4WD	1896	74	100	09.00-01.06	*
1.9 TDI (AHF)	Diesel	FWD	1896	81	110	07.98-01.06	*
1.9 TDI (AHF)	Diesel	FWD	1896	81	110	07.98-01.06	*
1.9 TDI (ASV)	Diesel	FWD	1896	81	110	07.98-01.06	*
1.9 TDI (ASV)	Diesel	FWD	1896	81	110	07.98-01.06	*
1.9 TDI (ASZ)	Diesel	FWD	1896	96	130	09.02-09.04	*
1.9 TDI (ASZ)	Diesel	FWD	1896	96	130	09.02-09.04	*
VW							
BORA / JETTA IV (1J2) 10.98-12.13						**Sedán (Compact car-C Segment)**	
1.4 16V (AHW)	Gasolina	FWD	1390	55	75	03.00-05.05	*
1.4 16V (AHW)	Gasolina	FWD	1390	55	75	03.00-05.05	*
1.4 16V (AKQ)	Gasolina	FWD	1390	55	75	03.00-05.05	*
1.4 16V (AKQ)	Gasolina	FWD	1390	55	75	03.00-05.05	*
1.4 16V (APE)	Gasolina	FWD	1390	55	75	03.00-05.05	*
1.4 16V (APE)	Gasolina	FWD	1390	55	75	03.00-05.05	*
1.4 16V (AXP)	Gasolina	FWD	1390	55	75	03.00-05.05	*
1.4 16V (AXP)	Gasolina	FWD	1390	55	75	03.00-05.05	*
1.4 16V (BCA)	Gasolina	FWD	1390	55	75	03.00-05.05	*
1.4 16V (BCA)	Gasolina	FWD	1390	55	75	03.00-05.05	*
1.6 (AEH)	Gasolina	FWD	1595	74	101	10.98-05.05	*
1.6 (AEH)	Gasolina	FWD	1595	74	101	10.98-05.05	*
1.6 (AKL)	Gasolina	FWD	1595	74	101	10.98-05.05	*
1.6 (AKL)	Gasolina	FWD	1595	74	101	10.98-05.05	*
1.6 (APF)	Gasolina	FWD	1595	74	101	10.98-05.05	*
1.6 (APF)	Gasolina	FWD	1595	74	101	10.98-05.05	*
1.6 (AVU)	Gasolina	FWD	1595	75	102	08.00-05.05	*
1.6 (AVU)	Gasolina	FWD	1595	75	102	08.00-05.05	*
1.6 (BFQ)	Gasolina	FWD	1595	75	102	08.00-05.05	*
1.6 (BFQ)	Gasolina	FWD	1595	75	102	08.00-05.05	*
1.6	Gasolina	FWD	1595	78	107	06.02-10.04	*
1.6	Gasolina	FWD	1595	78	107	06.02-10.04	*
1.6 16V (ATN)	Gasolina	FWD	1598	77	105	05.00-05.05	*
1.6 16V (ATN)	Gasolina	FWD	1598	77	105	05.00-05.05	*

1.6 16V (AUS)	Gasolina	FWD	1598	77	105	05.00-05.05	*
1.6 16V (AUS)	Gasolina	FWD	1598	77	105	05.00-05.05	*
1.6 16V (AZD)	Gasolina	FWD	1598	77	105	05.00-05.05	*
1.6 16V (AZD)	Gasolina	FWD	1598	77	105	05.00-05.05	*
1.6 16V (BCB)	Gasolina	FWD	1598	77	105	05.00-05.05	*
1.6 16V (BCB)	Gasolina	FWD	1598	77	105	05.00-05.05	*
1.6 FSI (BAD)	Gasolina	FWD	1598	81	110	01.02-05.05	*
1.6 FSI (BAD)	Gasolina	FWD	1598	81	110	01.02-05.05	*
1.8 (AGN)	Gasolina	FWD	1781	92	125	10.98-05.05	*
1.8 (AGN)	Gasolina	FWD	1781	92	125	10.98-05.05	*
1.8 (BAF)	Gasolina	FWD	1781	92	125	10.98-05.05	*
1.8 (BAF)	Gasolina	FWD	1781	92	125	10.98-05.05	*
1.8 4motion (AGN)	Gasolina	4WD	1781	92	125	02.99-05.05	*
1.8 4motion (AGN)	Gasolina	4WD	1781	92	125	02.99-05.05	*
2.0 (AEG)	Gasolina	FWD	1984	85	115	10.98-12.13	*
2.0 (AEG)	Gasolina	FWD	1984	85	115	10.98-12.13	*
2.0 (APK)	Gasolina	FWD	1984	85	115	10.98-12.13	*
2.0 (APK)	Gasolina	FWD	1984	85	115	10.98-12.13	*
2.0 (AQY)	Gasolina	FWD	1984	85	115	10.98-12.13	*
2.0 (AQY)	Gasolina	FWD	1984	85	115	10.98-12.13	*
2.0 (AVH)	Gasolina	FWD	1984	85	115	10.98-12.13	*
2.0 (AVH)	Gasolina	FWD	1984	85	115	10.98-12.13	*
2.0 (AZG)	Gasolina	FWD	1984	85	115	10.98-12.13	*
2.0 (AZG)	Gasolina	FWD	1984	85	115	10.98-12.13	*
2.0 (AZH)	Gasolina	FWD	1984	85	115	10.98-12.13	*
2.0 (AZH)	Gasolina	FWD	1984	85	115	10.98-12.13	*
2.0 (AZJ)	Gasolina	FWD	1984	85	115	10.98-12.13	*
2.0 (AZJ)	Gasolina	FWD	1984	85	115	10.98-12.13	*
2.0 (BBW)	Gasolina	FWD	1984	85	115	10.98-12.13	*
2.0 (BBW)	Gasolina	FWD	1984	85	115	10.98-12.13	*
2.0 (BER)	Gasolina	FWD	1984	85	115	10.98-12.13	*
2.0 (BER)	Gasolina	FWD	1984	85	115	10.98-12.13	*
2.0 (BEV)	Gasolina	FWD	1984	85	115	10.98-12.13	*
2.0 (BEV)	Gasolina	FWD	1984	85	115	10.98-12.13	*
2.0 (BHP)	Gasolina	FWD	1984	85	115	10.98-12.13	*
2.0 (BHP)	Gasolina	FWD	1984	85	115	10.98-12.13	*
2.0 (CBPA)	Gasolina	FWD	1984	85	115	10.98-12.13	*
2.0 (CBPA)	Gasolina	FWD	1984	85	115	10.98-12.13	*
2.0 (CFEA)	Gasolina	FWD	1984	85	115	10.98-12.13	*
2.0 (CFEA)	Gasolina	FWD	1984	85	115	10.98-12.13	*
2.0 4motion (AZH)	Gasolina	4WD	1984	85	115	04.00-05.05	*
2.0 4motion (AZH)	Gasolina	4WD	1984	85	115	04.00-05.05	*
2.0 4motion (AZJ)	Gasolina	4WD	1984	85	115	04.00-05.05	*
2.0 4motion (AZJ)	Gasolina	4WD	1984	85	115	04.00-05.05	*
1.9 SDI (AGP)	Diesel	FWD	1896	50	68	10.98-05.05	*
1.9 SDI (AGP)	Diesel	FWD	1896	50	68	10.98-05.05	*
1.9 SDI (AQM)	Diesel	FWD	1896	50	68	10.98-05.05	*
1.9 SDI (AQM)	Diesel	FWD	1896	50	68	10.98-05.05	*
1.9 TDI (AGR)	Diesel	FWD	1896	66	90	10.98-05.05	*
1.9 TDI (AGR)	Diesel	FWD	1896	66	90	10.98-05.05	*
1.9 TDI (ALH)	Diesel	FWD	1896	66	90	10.98-05.05	*

1.9 TDI (ALH)	Diesel	FWD	1896	66	90	10.98-05.05	*
1.9 TDI 4motion (AGR)	Diesel	4WD	1896	66	90	11.98-04.02	*
1.9 TDI 4motion (AGR)	Diesel	4WD	1896	66	90	11.98-04.02	*
1.9 TDI (ATD)	Diesel	FWD	1896	74	101	09.00-05.05	*
1.9 TDI (ATD)	Diesel	FWD	1896	74	101	09.00-05.05	*
1.9 TDI (AXR)	Diesel	FWD	1896	74	101	09.00-05.05	*
1.9 TDI (AXR)	Diesel	FWD	1896	74	101	09.00-05.05	*
1.9 TDI (BEW)	Diesel	FWD	1896	74	101	09.00-05.05	*
1.9 TDI (BEW)	Diesel	FWD	1896	74	101	09.00-05.05	*
1.9 TDI 4motion (ATD)	Diesel	4WD	1896	74	101	09.00-05.05	*
1.9 TDI 4motion (ATD)	Diesel	4WD	1896	74	101	09.00-05.05	*
1.9 TDI (AHF)	Diesel	FWD	1896	81	110	10.98-06.01	*
1.9 TDI (AHF)	Diesel	FWD	1896	81	110	10.98-06.01	*
1.9 TDI (ASV)	Diesel	FWD	1896	81	110	10.98-06.01	*
1.9 TDI (ASV)	Diesel	FWD	1896	81	110	10.98-06.01	*
1.9 TDI (AJM)	Diesel	FWD	1896	85	115	12.98-01.02	*
1.9 TDI (AJM)	Diesel	FWD	1896	85	115	12.98-01.02	*
1.9 TDI (AUY)	Diesel	FWD	1896	85	115	12.98-01.02	*
1.9 TDI (AUY)	Diesel	FWD	1896	85	115	12.98-01.02	*
1.9 TDI 4motion (AJM)	Diesel	4WD	1896	85	115	02.99-06.01	*
1.9 TDI 4motion (AJM)	Diesel	4WD	1896	85	115	02.99-06.01	*
1.9 TDI 4motion (AUY)	Diesel	4WD	1896	85	115	02.99-06.01	*
1.9 TDI 4motion (AUY)	Diesel	4WD	1896	85	115	02.99-06.01	*
BORA Variant / JETTA IV (1J6) 05.99-05.05				**[CAMBIADO]:Break (Compact car-C Segment)**			
1.4 16V (AHW)	Gasolina	FWD	1390	55	75	09.01-05.05	*
1.4 16V (AHW)	Gasolina	FWD	1390	55	75	09.01-05.05	*
1.4 16V (AXP)	Gasolina	FWD	1390	55	75	09.01-05.05	*
1.4 16V (AXP)	Gasolina	FWD	1390	55	75	09.01-05.05	*
1.4 16V (BCA)	Gasolina	FWD	1390	55	75	09.01-05.05	*
1.4 16V (BCA)	Gasolina	FWD	1390	55	75	09.01-05.05	*
1.6 (AEH)	Gasolina	FWD	1595	74	100	05.99-05.05	*
1.6 (AEH)	Gasolina	FWD	1595	74	100	05.99-05.05	*
1.6 (AKL)	Gasolina	FWD	1595	74	100	05.99-05.05	*
1.6 (AKL)	Gasolina	FWD	1595	74	100	05.99-05.05	*
1.6 (APF)	Gasolina	FWD	1595	74	100	05.99-05.05	*
1.6 (APF)	Gasolina	FWD	1595	74	100	05.99-05.05	*
1.6 (AVU)	Gasolina	FWD	1595	75	102	08.00-05.05	*
1.6 (AVU)	Gasolina	FWD	1595	75	102	08.00-05.05	*
1.6 (BFQ)	Gasolina	FWD	1595	75	102	08.00-05.05	*
1.6 (BFQ)	Gasolina	FWD	1595	75	102	08.00-05.05	*
1.6 16V (ATN)	Gasolina	FWD	1598	77	105	02.00-05.05	*
1.6 16V (ATN)	Gasolina	FWD	1598	77	105	02.00-05.05	*
1.6 16V (AUS)	Gasolina	FWD	1598	77	105	02.00-05.05	*
1.6 16V (AUS)	Gasolina	FWD	1598	77	105	02.00-05.05	*
1.6 16V (AZD)	Gasolina	FWD	1598	77	105	02.00-05.05	*
1.6 16V (AZD)	Gasolina	FWD	1598	77	105	02.00-05.05	*
1.6 16V (BCB)	Gasolina	FWD	1598	77	105	02.00-05.05	*
1.6 16V (BCB)	Gasolina	FWD	1598	77	105	02.00-05.05	*
1.6 FSI (BAD)	Gasolina	FWD	1598	81	110	01.02-05.05	*
1.6 FSI (BAD)	Gasolina	FWD	1598	81	110	01.02-05.05	*
1.8 4motion (AGN)	Gasolina	4WD	1781	92	125	05.99-05.05	*

1.8 4motion (AGN)	Gasolina	4WD	1781	92	125	05.99-05.05	*
2.0 (APK)	Gasolina	FWD	1984	85	115	05.99-05.05	*
2.0 (APK)	Gasolina	FWD	1984	85	115	05.99-05.05	*
2.0 (AQY)	Gasolina	FWD	1984	85	115	05.99-05.05	*
2.0 (AQY)	Gasolina	FWD	1984	85	115	05.99-05.05	*
2.0 (AVH)	Gasolina	FWD	1984	85	115	05.99-05.05	*
2.0 (AVH)	Gasolina	FWD	1984	85	115	05.99-05.05	*
2.0 (AZG)	Gasolina	FWD	1984	85	115	05.99-05.05	*
2.0 (AZG)	Gasolina	FWD	1984	85	115	05.99-05.05	*
2.0 (AZH)	Gasolina	FWD	1984	85	115	05.99-05.05	*
2.0 (AZH)	Gasolina	FWD	1984	85	115	05.99-05.05	*
2.0 (AZJ)	Gasolina	FWD	1984	85	115	05.99-05.05	*
2.0 (AZJ)	Gasolina	FWD	1984	85	115	05.99-05.05	*
2.0 (BEV)	Gasolina	FWD	1984	85	115	05.99-05.05	*
2.0 (BEV)	Gasolina	FWD	1984	85	115	05.99-05.05	*
2.0 4motion (AZH)	Gasolina	4WD	1984	85	115	04.00-05.05	*
2.0 4motion (AZH)	Gasolina	4WD	1984	85	115	04.00-05.05	*
2.0 4motion (AZJ)	Gasolina	4WD	1984	85	115	04.00-05.05	*
2.0 4motion (AZJ)	Gasolina	4WD	1984	85	115	04.00-05.05	*
2.0 4motion (ATF)	Gasolina	4WD	1984	88	120	12.99-05.03	*
2.0 4motion (ATF)	Gasolina	4WD	1984	88	120	12.99-05.03	*
1.9 TDI (AGR)	Diesel	FWD	1896	66	90	07.04-05.05	*
1.9 TDI (AGR)	Diesel	FWD	1896	66	90	07.04-05.05	*
1.9 TDI (ALH)	Diesel	FWD	1896	66	90	07.04-05.05	*
1.9 TDI (ALH)	Diesel	FWD	1896	66	90	07.04-05.05	*
1.9 TDI (ATD)	Diesel	FWD	1896	74	101	09.00-05.05	*
1.9 TDI (ATD)	Diesel	FWD	1896	74	101	09.00-05.05	*
1.9 TDI (AXR)	Diesel	FWD	1896	74	101	09.00-05.05	*
1.9 TDI (AXR)	Diesel	FWD	1896	74	101	09.00-05.05	*
1.9 TDI (BEW)	Diesel	FWD	1896	74	101	09.00-05.05	*
1.9 TDI (BEW)	Diesel	FWD	1896	74	101	09.00-05.05	*
1.9 TDI 4motion (ATD)	Diesel	4WD	1896	74	101	09.00-05.05	*
1.9 TDI 4motion (ATD)	Diesel	4WD	1896	74	101	09.00-05.05	*
1.9 TDI (AHF)	Diesel	FWD	1896	81	110	05.99-06.01	*
1.9 TDI (AHF)	Diesel	FWD	1896	81	110	05.99-06.01	*
1.9 TDI (ASV)	Diesel	FWD	1896	81	110	05.99-06.01	*
1.9 TDI (ASV)	Diesel	FWD	1896	81	110	05.99-06.01	*
1.9 TDI (AJM)	Diesel	FWD	1896	85	115	05.99-06.01	*
1.9 TDI (AJM)	Diesel	FWD	1896	85	115	05.99-06.01	*
1.9 TDI (AUY)	Diesel	FWD	1896	85	115	05.99-06.01	*
1.9 TDI (AUY)	Diesel	FWD	1896	85	115	05.99-06.01	*
1.9 TDI 4motion (AJM)	Diesel	4WD	1896	85	115	05.99-06.01	*
1.9 TDI 4motion (AJM)	Diesel	4WD	1896	85	115	05.99-06.01	*
1.9 TDI 4motion (AUY)	Diesel	4WD	1896	85	115	05.99-06.01	*
1.9 TDI 4motion (AUY)	Diesel	4WD	1896	85	115	05.99-06.01	*
GOLF IV (1J1) 08.97-04.08				**[CAMBIADO]:Fastback (Compact car-C Segment)**			
1.4 16V (AHW)	Gasolina	FWD	1390	55	75	10.97-05.04	*
1.4 16V (AHW)	Gasolina	FWD	1390	55	75	10.97-05.04	*
1.4 16V (AKQ)	Gasolina	FWD	1390	55	75	10.97-05.04	*
1.4 16V (AKQ)	Gasolina	FWD	1390	55	75	10.97-05.04	*
1.4 16V (APE)	Gasolina	FWD	1390	55	75	10.97-05.04	*

1.4 16V (APE)	Gasolina	FWD	1390	55	75	10.97-05.04	*
1.4 16V (AXP)	Gasolina	FWD	1390	55	75	10.97-05.04	*
1.4 16V (AXP)	Gasolina	FWD	1390	55	75	10.97-05.04	*
1.4 16V (BCA)	Gasolina	FWD	1390	55	75	10.97-05.04	*
1.4 16V (BCA)	Gasolina	FWD	1390	55	75	10.97-05.04	*
1.6	Gasolina	FWD	1595	68	92	12.98-05.02	*
1.6	Gasolina	FWD	1595	68	92	12.98-05.02	*
1.6 (AEH)	Gasolina	FWD	1595	74	100	08.97-05.04	*
1.6 (AEH)	Gasolina	FWD	1595	74	100	08.97-05.04	*
1.6 (AKL)	Gasolina	FWD	1595	74	100	08.97-05.04	*
1.6 (AKL)	Gasolina	FWD	1595	74	100	08.97-05.04	*
1.6 (APF)	Gasolina	FWD	1595	74	100	08.97-05.04	*
1.6 (APF)	Gasolina	FWD	1595	74	100	08.97-05.04	*
1.6 (AVU)	Gasolina	FWD	1595	75	102	08.00-06.05	*
1.6 (AVU)	Gasolina	FWD	1595	75	102	08.00-06.05	*
1.6 (BFQ)	Gasolina	FWD	1595	75	102	08.00-06.05	*
1.6 (BFQ)	Gasolina	FWD	1595	75	102	08.00-06.05	*
1.6	Gasolina	FWD	1595	78	107	08.03-06.05	*
1.6	Gasolina	FWD	1595	78	107	08.03-06.05	*
1.6 (BAH)	Gasolina	FWD	1598	74	101	02.01-03.07	*
1.6 (BAH)	Gasolina	FWD	1598	74	101	02.01-03.07	*
1.6 16V (ATN)	Gasolina	FWD	1598	77	105	02.00-06.05	*
1.6 16V (ATN)	Gasolina	FWD	1598	77	105	02.00-06.05	*
1.6 16V (AUS)	Gasolina	FWD	1598	77	105	02.00-06.05	*
1.6 16V (AUS)	Gasolina	FWD	1598	77	105	02.00-06.05	*
1.6 16V (AZD)	Gasolina	FWD	1598	77	105	02.00-06.05	*
1.6 16V (AZD)	Gasolina	FWD	1598	77	105	02.00-06.05	*
1.6 16V (BCB)	Gasolina	FWD	1598	77	105	02.00-06.05	*
1.6 16V (BCB)	Gasolina	FWD	1598	77	105	02.00-06.05	*
1.8	Gasolina	FWD	1781	77	105	04.98-05.02	*
1.8	Gasolina	FWD	1781	77	105	04.98-05.02	*
1.8 4motion (AGN)	Gasolina	4WD	1781	92	125	05.98-06.05	*
1.8 4motion (AGN)	Gasolina	4WD	1781	92	125	05.98-06.05	*
2.0 (AEG)	Gasolina	FWD	1984	85	115	07.98-05.04	*
2.0 (AEG)	Gasolina	FWD	1984	85	115	07.98-05.04	*
2.0 (APK)	Gasolina	FWD	1984	85	115	07.98-05.04	*
2.0 (APK)	Gasolina	FWD	1984	85	115	07.98-05.04	*
2.0 (AQY)	Gasolina	FWD	1984	85	115	07.98-05.04	*
2.0 (AQY)	Gasolina	FWD	1984	85	115	07.98-05.04	*
2.0 (AVH)	Gasolina	FWD	1984	85	115	07.98-05.04	*
2.0 (AVH)	Gasolina	FWD	1984	85	115	07.98-05.04	*
2.0 (AZG)	Gasolina	FWD	1984	85	115	07.98-05.04	*
2.0 (AZG)	Gasolina	FWD	1984	85	115	07.98-05.04	*
2.0 (AZJ)	Gasolina	FWD	1984	85	115	07.98-05.04	*
2.0 (AZJ)	Gasolina	FWD	1984	85	115	07.98-05.04	*
2.0 (BER)	Gasolina	FWD	1984	85	115	07.98-05.04	*
2.0 (BER)	Gasolina	FWD	1984	85	115	07.98-05.04	*
2.0 (BEV)	Gasolina	FWD	1984	85	115	07.98-05.04	*
2.0 (BEV)	Gasolina	FWD	1984	85	115	07.98-05.04	*
2.0 4motion (AZH)	Gasolina	4WD	1984	85	115	10.00-06.05	*
2.0 4motion (AZH)	Gasolina	4WD	1984	85	115	10.00-06.05	*

2.0 4motion (AZJ)	Gasolina	4WD	1984	85	115	10.00-06.05	*
2.0 4motion (AZJ)	Gasolina	4WD	1984	85	115	10.00-06.05	*
1.9 SDI (AGP)	Diesel	FWD	1896	50	68	08.97-06.05	*
1.9 SDI (AGP)	Diesel	FWD	1896	50	68	08.97-06.05	*
1.9 SDI (AQM)	Diesel	FWD	1896	50	68	08.97-06.05	*
1.9 SDI (AQM)	Diesel	FWD	1896	50	68	08.97-06.05	*
1.9 TDI (AGR)	Diesel	FWD	1896	66	90	10.97-05.04	*
1.9 TDI (AGR)	Diesel	FWD	1896	66	90	10.97-05.04	*
1.9 TDI (ALH)	Diesel	FWD	1896	66	90	10.97-05.04	*
1.9 TDI (ALH)	Diesel	FWD	1896	66	90	10.97-05.04	*
1.9 TDI 4motion (AGR)	Diesel	4WD	1896	66	90	07.98-04.02	*
1.9 TDI 4motion (AGR)	Diesel	4WD	1896	66	90	07.98-04.02	*
1.9 TDI (ATD)	Diesel	FWD	1896	74	101	09.00-06.05	*
1.9 TDI (ATD)	Diesel	FWD	1896	74	101	09.00-06.05	*
1.9 TDI (AXR)	Diesel	FWD	1896	74	101	09.00-06.05	*
1.9 TDI (AXR)	Diesel	FWD	1896	74	101	09.00-06.05	*
1.9 TDI (BEW)	Diesel	FWD	1896	74	101	09.00-06.05	*
1.9 TDI (BEW)	Diesel	FWD	1896	74	101	09.00-06.05	*
1.9 TDI 4motion (ATD)	Diesel	4WD	1896	74	101	09.00-06.05	*
1.9 TDI 4motion (ATD)	Diesel	4WD	1896	74	101	09.00-06.05	*
1.9 TDI (AHF)	Diesel	FWD	1896	81	110	08.97-05.04	*
1.9 TDI (AHF)	Diesel	FWD	1896	81	110	08.97-05.04	*
1.9 TDI (ASV)	Diesel	FWD	1896	81	110	08.97-05.04	*
1.9 TDI (ASV)	Diesel	FWD	1896	81	110	08.97-05.04	*
1.9 TDI (AJM)	Diesel	FWD	1896	85	115	12.98-06.01	*
1.9 TDI (AJM)	Diesel	FWD	1896	85	115	12.98-06.01	*
1.9 TDI (AUY)	Diesel	FWD	1896	85	115	12.98-06.01	*
1.9 TDI (AUY)	Diesel	FWD	1896	85	115	12.98-06.01	*
1.9 TDI 4motion (AJM)	Diesel	4WD	1896	85	115	09.99-06.01	*
1.9 TDI 4motion (AJM)	Diesel	4WD	1896	85	115	09.99-06.01	*
1.9 TDI 4motion (AUY)	Diesel	4WD	1896	85	115	09.99-06.01	*
1.9 TDI 4motion (AUY)	Diesel	4WD	1896	85	115	09.99-06.01	*
GOLF IV VAN Variant / JETTA IV (1J5) 05.99-06.06						**[CAMBIADO]:Furgón/Break (Compact car-C Segment)**	
1.4 (AXP)	Gasolina	FWD	1390	55	75	05.00-06.06	*
1.4 (AXP)	Gasolina	FWD	1390	55	75	05.00-06.06	*
1.4 (BCA)	Gasolina	FWD	1390	55	75	05.00-06.06	*
1.4 (BCA)	Gasolina	FWD	1390	55	75	05.00-06.06	*
1.6 (AUS)	Gasolina	FWD	1598	77	105	05.00-06.06	*
1.6 (AUS)	Gasolina	FWD	1598	77	105	05.00-06.06	*
1.6 (AZD)	Gasolina	FWD	1598	77	105	05.00-06.06	*
1.6 (AZD)	Gasolina	FWD	1598	77	105	05.00-06.06	*
1.6 (BCB)	Gasolina	FWD	1598	77	105	05.00-06.06	*
1.6 (BCB)	Gasolina	FWD	1598	77	105	05.00-06.06	*
1.9 SDI (AQM)	Diesel	FWD	1896	50	68	05.99-05.06	*
1.9 SDI (AQM)	Diesel	FWD	1896	50	68	05.99-05.06	*
1.9 TDI (AGR)	Diesel	FWD	1896	66	90	05.99-05.06	*
1.9 TDI (AGR)	Diesel	FWD	1896	66	90	05.99-05.06	*
1.9 TDI (ALH)	Diesel	FWD	1896	66	90	05.99-05.06	*
1.9 TDI (ALH)	Diesel	FWD	1896	66	90	05.99-05.06	*
1.9 TDI (ATD)	Diesel	FWD	1896	74	101	02.00-06.06	*
1.9 TDI (ATD)	Diesel	FWD	1896	74	101	02.00-06.06	*

1.9 TDI (AXR)	Diesel	FWD	1896	74	101	02.00-06.06	*
1.9 TDI (AXR)	Diesel	FWD	1896	74	101	02.00-06.06	*
1.9 TDI (AHF)	Diesel	FWD	1896	81	110	05.99-05.06	*
1.9 TDI (AHF)	Diesel	FWD	1896	81	110	05.99-05.06	*
1.9 TDI (ASV)	Diesel	FWD	1896	81	110	05.99-05.06	*
1.9 TDI (ASV)	Diesel	FWD	1896	81	110	05.99-05.06	*
1.9 TDI (AJM)	Diesel	FWD	1896	85	116	05.99-04.02	*
1.9 TDI (AJM)	Diesel	FWD	1896	85	116	05.99-04.02	*
GOLF IV Variant / JETTA IV (1J5) 05.99-06.06				**[CAMBIADO]:Break (Compact car-C Segment)**			
1.4 16V (AHW)	Gasolina	FWD	1390	55	75	05.99-06.06	*
1.4 16V (AHW)	Gasolina	FWD	1390	55	75	05.99-06.06	*
1.4 16V (AKQ)	Gasolina	FWD	1390	55	75	05.99-06.06	*
1.4 16V (AKQ)	Gasolina	FWD	1390	55	75	05.99-06.06	*
1.4 16V (APE)	Gasolina	FWD	1390	55	75	05.99-06.06	*
1.4 16V (APE)	Gasolina	FWD	1390	55	75	05.99-06.06	*
1.4 16V (AXP)	Gasolina	FWD	1390	55	75	05.99-06.06	*
1.4 16V (AXP)	Gasolina	FWD	1390	55	75	05.99-06.06	*
1.4 16V (BCA)	Gasolina	FWD	1390	55	75	05.99-06.06	*
1.4 16V (BCA)	Gasolina	FWD	1390	55	75	05.99-06.06	*
1.6 (AEH)	Gasolina	FWD	1595	74	101	05.99-04.02	*
1.6 (AEH)	Gasolina	FWD	1595	74	101	05.99-04.02	*
1.6 (AKL)	Gasolina	FWD	1595	74	101	05.99-04.02	*
1.6 (AKL)	Gasolina	FWD	1595	74	101	05.99-04.02	*
1.6 (APF)	Gasolina	FWD	1595	74	101	05.99-04.02	*
1.6 (APF)	Gasolina	FWD	1595	74	101	05.99-04.02	*
1.6 (AVU)	Gasolina	FWD	1595	75	102	08.00-06.06	*
1.6 (AVU)	Gasolina	FWD	1595	75	102	08.00-06.06	*
1.6 (BFQ)	Gasolina	FWD	1595	75	102	08.00-06.06	*
1.6 (BFQ)	Gasolina	FWD	1595	75	102	08.00-06.06	*
1.6 16V (ATN)	Gasolina	FWD	1598	77	105	02.00-06.06	*
1.6 16V (ATN)	Gasolina	FWD	1598	77	105	02.00-06.06	*
1.6 16V (AUS)	Gasolina	FWD	1598	77	105	02.00-06.06	*
1.6 16V (AUS)	Gasolina	FWD	1598	77	105	02.00-06.06	*
1.6 16V (AZD)	Gasolina	FWD	1598	77	105	02.00-06.06	*
1.6 16V (AZD)	Gasolina	FWD	1598	77	105	02.00-06.06	*
1.6 16V (BCB)	Gasolina	FWD	1598	77	105	02.00-06.06	*
1.6 16V (BCB)	Gasolina	FWD	1598	77	105	02.00-06.06	*
1.6 FSI (BAD)	Gasolina	FWD	1598	81	110	01.02-06.06	*
1.6 FSI (BAD)	Gasolina	FWD	1598	81	110	01.02-06.06	*
1.8 4motion (AGN)	Gasolina	4WD	1781	92	125	05.99-06.06	*
1.8 4motion (AGN)	Gasolina	4WD	1781	92	125	05.99-06.06	*
2.0 (APK)	Gasolina	FWD	1984	85	115	05.99-06.06	*
2.0 (APK)	Gasolina	FWD	1984	85	115	05.99-06.06	*
2.0 (AQY)	Gasolina	FWD	1984	85	115	05.99-06.06	*
2.0 (AQY)	Gasolina	FWD	1984	85	115	05.99-06.06	*
2.0 (AZJ)	Gasolina	FWD	1984	85	115	05.99-06.06	*
2.0 (AZJ)	Gasolina	FWD	1984	85	115	05.99-06.06	*
2.0 4motion (AZH)	Gasolina	4WD	1984	85	115	10.00-06.06	*
2.0 4motion (AZH)	Gasolina	4WD	1984	85	115	10.00-06.06	*
2.0 4motion (AZJ)	Gasolina	4WD	1984	85	115	10.00-06.06	*
2.0 4motion (AZJ)	Gasolina	4WD	1984	85	115	10.00-06.06	*

2.0 4motion (ATF)	Gasolina	4WD	1984	88	120	12.99-06.06	*
2.0 4motion (ATF)	Gasolina	4WD	1984	88	120	12.99-06.06	*
2.0 Bi-Fuel (BEH)	Gasol./Gas (CNG)	FWD	1984	85	116	02.02-06.06	*
2.0 Bi-Fuel (BEH)	Gasol./Gas (CNG)	FWD	1984	85	116	02.02-06.06	*
1.9 SDI (AGP)	Diesel	FWD	1896	50	68	05.99-06.06	*
1.9 SDI (AGP)	Diesel	FWD	1896	50	68	05.99-06.06	*
1.9 SDI (AQM)	Diesel	FWD	1896	50	68	05.99-06.06	*
1.9 SDI (AQM)	Diesel	FWD	1896	50	68	05.99-06.06	*
1.9 TDI (AGR)	Diesel	FWD	1896	66	90	05.99-05.06	*
1.9 TDI (AGR)	Diesel	FWD	1896	66	90	05.99-05.06	*
1.9 TDI (ALH)	Diesel	FWD	1896	66	90	05.99-05.06	*
1.9 TDI (ALH)	Diesel	FWD	1896	66	90	05.99-05.06	*
1.9 TDI 4motion (AGR)	Diesel	4WD	1896	66	90	05.99-04.02	*
1.9 TDI 4motion (AGR)	Diesel	4WD	1896	66	90	05.99-04.02	*
1.9 TDI (ATD)	Diesel	FWD	1896	74	101	09.00-06.06	*
1.9 TDI (ATD)	Diesel	FWD	1896	74	101	09.00-06.06	*
1.9 TDI (AXR)	Diesel	FWD	1896	74	101	09.00-06.06	*
1.9 TDI (AXR)	Diesel	FWD	1896	74	101	09.00-06.06	*
1.9 TDI 4motion (ATD)	Diesel	4WD	1896	74	101	09.00-06.06	*
1.9 TDI 4motion (ATD)	Diesel	4WD	1896	74	101	09.00-06.06	*
1.9 TDI (AHF)	Diesel	FWD	1896	81	110	05.99-06.01	*
1.9 TDI (AHF)	Diesel	FWD	1896	81	110	05.99-06.01	*
1.9 TDI (ASV)	Diesel	FWD	1896	81	110	05.99-06.01	*
1.9 TDI (ASV)	Diesel	FWD	1896	81	110	05.99-06.01	*
1.9 TDI (AJM)	Diesel	FWD	1896	85	115	08.99-06.01	*
1.9 TDI (AJM)	Diesel	FWD	1896	85	115	08.99-06.01	*
1.9 TDI (AUY)	Diesel	FWD	1896	85	115	08.99-06.01	*
1.9 TDI (AUY)	Diesel	FWD	1896	85	115	08.99-06.01	*
1.9 TDI 4motion (AJM)	Diesel	4WD	1896	85	115	12.99-04.01	*
1.9 TDI 4motion (AJM)	Diesel	4WD	1896	85	115	12.99-04.01	*
GOLF V Variant / BORA V / JETTA V / VENTO V (1K5) 01.07-07.09				**[CAMBIADO]:Break (Compact car-C Segment)**			
1.6 (BSE)	Gasolina	FWD	1595	75	102	06.07-07.09	*
1.6 (BSE)	Gasolina	FWD	1595	75	102	06.07-07.09	*
1.6 (BSF)	Gasolina	FWD	1595	75	102	06.07-07.09	*
1.6 (BSF)	Gasolina	FWD	1595	75	102	06.07-07.09	*
1.6 (CCSA)	Gasolina	FWD	1595	75	102	06.07-07.09	*
1.6 (CCSA)	Gasolina	FWD	1595	75	102	06.07-07.09	*
1.9 TDI (BLS)	Diesel	FWD	1896	77	105	06.07-07.09	*
1.9 TDI (BLS)	Diesel	FWD	1896	77	105	06.07-07.09	*
1.9 TDI (BXE)	Diesel	FWD	1896	77	105	06.07-07.09	*
1.9 TDI (BXE)	Diesel	FWD	1896	77	105	06.07-07.09	*
1.9 TDI 4motion (BLS)	Diesel	4WD	1896	77	105	01.08-07.09	*
1.9 TDI 4motion (BLS)	Diesel	4WD	1896	77	105	01.08-07.09	*
JETTA V / BORA / VENTO (1K2) 09.04-12.13				**Sedán (Compact car-C Segment)**			
1.6 (BGU)	Gasolina	FWD	1595	75	102	09.04-10.10	*
1.6 (BGU)	Gasolina	FWD	1595	75	102	09.04-10.10	*
1.6 (BSE)	Gasolina	FWD	1595	75	102	09.04-10.10	*
1.6 (BSE)	Gasolina	FWD	1595	75	102	09.04-10.10	*

1.6 (BSF)	Gasolina	FWD	1595	75	102	09.04-10.10	*
1.6 (BSF)	Gasolina	FWD	1595	75	102	09.04-10.10	*
1.6 (CCSA)	Gasolina	FWD	1595	75	102	09.04-10.10	*
1.6 (CCSA)	Gasolina	FWD	1595	75	102	09.04-10.10	*
1.6 FSI (BLF)	Gasolina	FWD	1598	85	115	09.05-10.10	*
1.6 FSI (BLF)	Gasolina	FWD	1598	85	115	09.05-10.10	*
1.9 TDI (BKC)	Diesel	FWD	1896	77	105	08.05-10.10	*
1.9 TDI (BKC)	Diesel	FWD	1896	77	105	08.05-10.10	*
1.9 TDI (BLS)	Diesel	FWD	1896	77	105	08.05-10.10	*
1.9 TDI (BLS)	Diesel	FWD	1896	77	105	08.05-10.10	*
1.9 TDI (BXE)	Diesel	FWD	1896	77	105	08.05-10.10	*
1.9 TDI (BXE)	Diesel	FWD	1896	77	105	08.05-10.10	*
NEW BEETLE / BETTLE (1Y7) 09.02-07.12				**Cabrío (Compact car-C Segment)**			
1.4 (BCA)	Gasolina	FWD	1390	55	75	01.03-09.10	*
1.4 (BCA)	Gasolina	FWD	1390	55	75	01.03-09.10	*
1.6 (BFS)	Gasolina	FWD	1595	75	102	01.03-09.10	*
1.6 (BFS)	Gasolina	FWD	1595	75	102	01.03-09.10	*
1.8 T (AWU)	Gasolina	FWD	1781	110	150	01.03-09.10	*
1.8 T (AWU)	Gasolina	FWD	1781	110	150	01.03-09.10	*
1.8 T (AWV)	Gasolina	FWD	1781	110	150	01.03-09.10	*
1.8 T (AWV)	Gasolina	FWD	1781	110	150	01.03-09.10	*
1.8 T (BKF)	Gasolina	FWD	1781	110	150	01.03-09.10	*
1.8 T (BKF)	Gasolina	FWD	1781	110	150	01.03-09.10	*
2.0 (AZJ)	Gasolina	FWD	1984	85	115	09.02-10.10	*
2.0 (AZJ)	Gasolina	FWD	1984	85	115	09.02-10.10	*
2.0 (BDC)	Gasolina	FWD	1984	85	115	09.02-10.10	*
2.0 (BDC)	Gasolina	FWD	1984	85	115	09.02-10.10	*
2.0 (BEV)	Gasolina	FWD	1984	85	115	09.02-10.10	*
2.0 (BEV)	Gasolina	FWD	1984	85	115	09.02-10.10	*
2.0 (BGD)	Gasolina	FWD	1984	85	115	09.02-10.10	*
2.0 (BGD)	Gasolina	FWD	1984	85	115	09.02-10.10	*
1.9 TDI (BSW)	Diesel	FWD	1896	77	105	07.05-09.10	*
1.9 TDI (BSW)	Diesel	FWD	1896	77	105	07.05-09.10	*
NEW BEETLE / BETTLE / NOVO FUSCA (9C1, 1C1) 01.98-07.12				**[CAMBIADO]:Fastback (Compact car-C Segment)**			
1.4 (BCA)	Gasolina	FWD	1390	55	75	11.01-09.10	*
1.4 (BCA)	Gasolina	FWD	1390	55	75	11.01-09.10	*
1.6 (AWH)	Gasolina	FWD	1595	74	100	10.99-09.00	*
1.6 (AWH)	Gasolina	FWD	1595	74	100	10.99-09.00	*
1.6 (AYD)	Gasolina	FWD	1595	75	102	06.00-09.10	*
1.6 (AYD)	Gasolina	FWD	1595	75	102	06.00-09.10	*
1.6 (BFS)	Gasolina	FWD	1595	75	102	06.00-09.10	*
1.6 (BFS)	Gasolina	FWD	1595	75	102	06.00-09.10	*
1.8 T (AGU)	Gasolina	FWD	1781	110	150	10.99-09.10	*
1.8 T (AGU)	Gasolina	FWD	1781	110	150	10.99-09.10	*
1.8 T (APH)	Gasolina	FWD	1781	110	150	10.99-09.10	*
1.8 T (APH)	Gasolina	FWD	1781	110	150	10.99-09.10	*
1.8 T (AVC)	Gasolina	FWD	1781	110	150	10.99-09.10	*
1.8 T (AVC)	Gasolina	FWD	1781	110	150	10.99-09.10	*
1.8 T (AWU)	Gasolina	FWD	1781	110	150	10.99-09.10	*
1.8 T (AWU)	Gasolina	FWD	1781	110	150	10.99-09.10	*

1.8 T (AWV)	Gasolina	FWD	1781	110	150	10.99-09.10	*
1.8 T (AWV)	Gasolina	FWD	1781	110	150	10.99-09.10	*
1.8 T (BKF)	Gasolina	FWD	1781	110	150	10.99-09.10	*
1.8 T (BKF)	Gasolina	FWD	1781	110	150	10.99-09.10	*
2.0 (AEG)	Gasolina	FWD	1984	85	115	01.98-09.10	*
2.0 (AEG)	Gasolina	FWD	1984	85	115	01.98-09.10	*
2.0 (APK)	Gasolina	FWD	1984	85	115	01.98-09.10	*
2.0 (APK)	Gasolina	FWD	1984	85	115	01.98-09.10	*
2.0 (AQY)	Gasolina	FWD	1984	85	115	01.98-09.10	*
2.0 (AQY)	Gasolina	FWD	1984	85	115	01.98-09.10	*
2.0 (AVH)	Gasolina	FWD	1984	85	115	01.98-09.10	*
2.0 (AVH)	Gasolina	FWD	1984	85	115	01.98-09.10	*
2.0 (AZG)	Gasolina	FWD	1984	85	115	01.98-09.10	*
2.0 (AZG)	Gasolina	FWD	1984	85	115	01.98-09.10	*
2.0 (AZJ)	Gasolina	FWD	1984	85	115	01.98-09.10	*
2.0 (AZJ)	Gasolina	FWD	1984	85	115	01.98-09.10	*
2.0 (BER)	Gasolina	FWD	1984	85	115	01.98-09.10	*
2.0 (BER)	Gasolina	FWD	1984	85	115	01.98-09.10	*
2.0 (BEV)	Gasolina	FWD	1984	85	115	01.98-09.10	*
2.0 (BEV)	Gasolina	FWD	1984	85	115	01.98-09.10	*
1.9 TDI (ALH)	Diesel	FWD	1896	66	90	01.98-06.04	*
1.9 TDI (ALH)	Diesel	FWD	1896	66	90	01.98-06.04	*
1.9 TDI (ATD)	Diesel	FWD	1896	74	101	02.01-09.10	*
1.9 TDI (ATD)	Diesel	FWD	1896	74	101	02.01-09.10	*
1.9 TDI (AXR)	Diesel	FWD	1896	74	101	02.01-09.10	*
1.9 TDI (AXR)	Diesel	FWD	1896	74	101	02.01-09.10	*
1.9 TDI (BEW)	Diesel	FWD	1896	74	101	02.01-09.10	*
1.9 TDI (BEW)	Diesel	FWD	1896	74	101	02.01-09.10	*
1.9 TDI (BSW)	Diesel	FWD	1896	77	105	07.05-09.10	*
1.9 TDI (BSW)	Diesel	FWD	1896	77	105	07.05-09.10	*