LISTA DE APLICACIONES - BUYERS GUIDE

3R13385602

Weight: 12.515

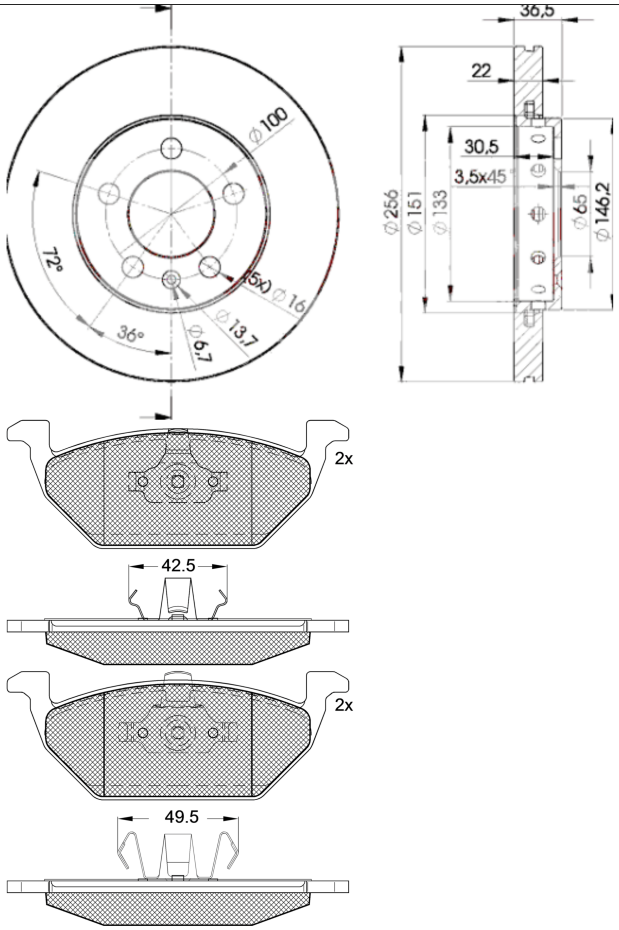

3R13385602

Ate - Teves

146x54.7x19.5
Ø256x22x36.5

WVA
23130

Sin Filas

Trac.	CC	Kw	CV		Front / Rear

SEAT

CORDOBA III (6L2) 09.02-11.09							Sedán (Supermini car-B Segment)
1.2 (AZQ)	Gasolina	FWD	1198	47	64	10.02-06.06	*
1.2 (AZQ)	Gasolina	FWD	1198	47	64	10.02-06.06	*
1.2 (BME)	Gasolina	FWD	1198	47	64	10.02-06.06	*
1.2 (BME)	Gasolina	FWD	1198	47	64	10.02-06.06	*
1.2 12V (BXV)	Gasolina	FWD	1198	51	70	05.06-11.09	*
1.2 12V (BXV)	Gasolina	FWD	1198	51	70	05.06-11.09	*
1.4 16V (BBY)	Gasolina	FWD	1390	55	75	09.02-12.07	*
1.4 16V (BBY)	Gasolina	FWD	1390	55	75	09.02-12.07	*
1.4 16V (BKY)	Gasolina	FWD	1390	55	75	09.02-12.07	*
1.4 16V (BKY)	Gasolina	FWD	1390	55	75	09.02-12.07	*
1.4 16V (BXW)	Gasolina	FWD	1390	63	86	05.06-11.09	*
1.4 16V (BXW)	Gasolina	FWD	1390	63	86	05.06-11.09	*
1.4 TDI (BNM)	Diesel	FWD	1422	51	70	05.05-11.09	*
1.4 TDI (BNM)	Diesel	FWD	1422	51	70	05.05-11.09	*
1.4 TDI (AMF)	Diesel	FWD	1422	55	75	10.02-12.05	*
1.4 TDI (AMF)	Diesel	FWD	1422	55	75	10.02-12.05	*
1.4 TDI (BMS)	Diesel	FWD	1422	59	80	06.05-11.09	*
1.4 TDI (BMS)	Diesel	FWD	1422	59	80	06.05-11.09	*
1.4 TDI (BNV)	Diesel	FWD	1422	59	80	06.05-11.09	*
1.4 TDI (BNV)	Diesel	FWD	1422	59	80	06.05-11.09	*
1.9 SDI (ASY)	Diesel	FWD	1896	47	64	09.02-11.09	*
1.9 SDI (ASY)	Diesel	FWD	1896	47	64	09.02-11.09	*
1.9 TDI (ATD)	Diesel	FWD	1896	74	100	09.02-11.09	*

1.9 TDI (ATD)	Diesel	FWD	1896	74	100	09.02-11.09	*
1.9 TDI (AXR)	Diesel	FWD	1896	74	100	09.02-11.09	*
1.9 TDI (AXR)	Diesel	FWD	1896	74	100	09.02-11.09	*
1.9 TDI (BMT)	Diesel	FWD	1896	74	100	09.02-11.09	*
1.9 TDI (BMT)	Diesel	FWD	1896	74	100	09.02-11.09	*
IBIZA III (6L1) 02.02-11.09				**[CAMBIADO]:Fastback (Supermini car-B Segment)**			
1.2 (BBM)	Gasolina	FWD	1198	44	60	06.07-05.08	*
1.2 (BBM)	Gasolina	FWD	1198	44	60	06.07-05.08	*
1.2 (AZQ)	Gasolina	FWD	1198	47	64	02.02-06.06	*
1.2 (AZQ)	Gasolina	FWD	1198	47	64	02.02-06.06	*
1.2 (BME)	Gasolina	FWD	1198	47	64	02.02-06.06	*
1.2 (BME)	Gasolina	FWD	1198	47	64	02.02-06.06	*
1.2 12V (BXV)	Gasolina	FWD	1198	51	70	05.06-11.09	*
1.2 12V (BXV)	Gasolina	FWD	1198	51	70	05.06-11.09	*
1.4 16V (BBY)	Gasolina	FWD	1390	55	75	02.02-12.07	*
1.4 16V (BBY)	Gasolina	FWD	1390	55	75	02.02-12.07	*
1.4 16V (BKY)	Gasolina	FWD	1390	55	75	02.02-12.07	*
1.4 16V (BKY)	Gasolina	FWD	1390	55	75	02.02-12.07	*
1.4 16V (BXW)	Gasolina	FWD	1390	63	86	05.06-11.09	*
1.4 16V (BXW)	Gasolina	FWD	1390	63	86	05.06-11.09	*
1.6 16V (BTS)	Gasolina	FWD	1598	77	105	11.06-11.09	*
1.6 16V (BTS)	Gasolina	FWD	1598	77	105	11.06-11.09	*
1.4 TDI (BNM)	Diesel	FWD	1422	51	70	05.05-11.09	*
1.4 TDI (BNM)	Diesel	FWD	1422	51	70	05.05-11.09	*
1.4 TDI (AMF)	Diesel	FWD	1422	55	75	05.02-12.05	*
1.4 TDI (AMF)	Diesel	FWD	1422	55	75	05.02-12.05	*
1.4 TDI (BMS)	Diesel	FWD	1422	59	80	06.05-11.09	*
1.4 TDI (BMS)	Diesel	FWD	1422	59	80	06.05-11.09	*
1.4 TDI (BNV)	Diesel	FWD	1422	59	80	06.05-11.09	*
1.4 TDI (BNV)	Diesel	FWD	1422	59	80	06.05-11.09	*
1.9 SDI (ASY)	Diesel	FWD	1896	47	64	02.02-12.05	*
1.9 SDI (ASY)	Diesel	FWD	1896	47	64	02.02-12.05	*
IBIZA IV (6J5, 6P1) 03.08-				**[CAMBIADO]:Fastback (Supermini car-B Segment)**			
1.2 (BZG)	Gasolina	FWD	1198	51	70	03.08-05.15	*
1.2 (BZG)	Gasolina	FWD	1198	51	70	03.08-05.15	*
1.2 (CGPA)	Gasolina	FWD	1198	51	70	03.08-05.15	*
1.2 (CGPA)	Gasolina	FWD	1198	51	70	03.08-05.15	*
1.2 (CJLB)	Gasolina	FWD	1198	51	70	03.08-05.15	*
1.2 (CJLB)	Gasolina	FWD	1198	51	70	03.08-05.15	*
1.4 (BXW)	Gasolina	FWD	1390	63	85	03.08-05.15	*
1.4 (BXW)	Gasolina	FWD	1390	63	85	03.08-05.15	*
1.4 (CGGB)	Gasolina	FWD	1390	63	85	03.08-05.15	*
1.4 (CGGB)	Gasolina	FWD	1390	63	85	03.08-05.15	*
1.6 (BTS)	Gasolina	FWD	1598	77	105	05.08-03.12	*
1.6 (BTS)	Gasolina	FWD	1598	77	105	05.08-03.12	*
1.4 TDI (BMS)	Diesel	FWD	1422	59	80	07.08-06.10	*
1.4 TDI (BMS)	Diesel	FWD	1422	59	80	07.08-06.10	*
1.9 TDI (BXJ)	Diesel	FWD	1896	66	90	07.08-06.10	*
1.9 TDI (BXJ)	Diesel	FWD	1896	66	90	07.08-06.10	*
1.9 TDI (BLS)	Diesel	FWD	1896	77	105	03.08-06.10	*

1.9 TDI (BLS)	Diesel	FWD	1896	77	105	03.08-06.10	*
IBIZA IV (6J1) 04.08-				**Furgón/hatchback (Supermini car-B Segment)**			
1.2 (CGPA)	Gasolina	FWD	1198	51	69	04.08-05.15	*
1.2 (CGPA)	Gasolina	FWD	1198	51	69	04.08-05.15	*
IBIZA IV SC (6J1, 6P5) 06.08-12.18				**[CAMBIADO]:Fastback (Supermini car-B Segment)**			
1.2 (BZG)	Gasolina	FWD	1198	51	70	07.08-05.15	*
1.2 (BZG)	Gasolina	FWD	1198	51	70	07.08-05.15	*
1.2 (CGPA)	Gasolina	FWD	1198	51	70	07.08-05.15	*
1.2 (CGPA)	Gasolina	FWD	1198	51	70	07.08-05.15	*
1.4 (BXW)	Gasolina	FWD	1390	63	85	07.08-05.15	*
1.4 (BXW)	Gasolina	FWD	1390	63	85	07.08-05.15	*
1.4 (CGGB)	Gasolina	FWD	1390	63	85	07.08-05.15	*
1.4 (CGGB)	Gasolina	FWD	1390	63	85	07.08-05.15	*
1.4 LPG	Gasol./Gas (LPG)	FWD	1390	63	85	07.08-05.11	*
1.4 LPG	Gasol./Gas (LPG)	FWD	1390	63	85	07.08-05.11	*
LEON (1M1) 11.99-06.06				**[CAMBIADO]:Fastback (Compact car-C Segment)**			
1.4 16V (AHW)	Gasolina	FWD	1390	55	75	11.99-06.06	*
1.4 16V (AHW)	Gasolina	FWD	1390	55	75	11.99-06.06	*
1.4 16V (APE)	Gasolina	FWD	1390	55	75	11.99-06.06	*
1.4 16V (APE)	Gasolina	FWD	1390	55	75	11.99-06.06	*
1.4 16V (AXP)	Gasolina	FWD	1390	55	75	11.99-06.06	*
1.4 16V (AXP)	Gasolina	FWD	1390	55	75	11.99-06.06	*
1.4 16V (BCA)	Gasolina	FWD	1390	55	75	11.99-06.06	*
1.4 16V (BCA)	Gasolina	FWD	1390	55	75	11.99-06.06	*
1.6 (AEH)	Gasolina	FWD	1595	74	100	11.99-06.06	*
1.6 (AEH)	Gasolina	FWD	1595	74	100	11.99-06.06	*
1.6 (AKL)	Gasolina	FWD	1595	74	100	11.99-06.06	*
1.6 (AKL)	Gasolina	FWD	1595	74	100	11.99-06.06	*
1.6 16V (AUS)	Gasolina	FWD	1598	77	105	09.00-06.06	*
1.6 16V (AUS)	Gasolina	FWD	1598	77	105	09.00-06.06	*
1.6 16V (AZD)	Gasolina	FWD	1598	77	105	09.00-06.06	*
1.6 16V (AZD)	Gasolina	FWD	1598	77	105	09.00-06.06	*
1.6 16V (BCB)	Gasolina	FWD	1598	77	105	09.00-06.06	*
1.6 16V (BCB)	Gasolina	FWD	1598	77	105	09.00-06.06	*
TOLEDO II (1M2) 10.98-05.06				**Sedán (Compact car-C Segment)**			
1.4 16V (AHW)	Gasolina	FWD	1390	55	75	01.00-05.02	*
1.4 16V (AHW)	Gasolina	FWD	1390	55	75	01.00-05.02	*
1.4 16V (APE)	Gasolina	FWD	1390	55	75	01.00-05.02	*
1.4 16V (APE)	Gasolina	FWD	1390	55	75	01.00-05.02	*
1.4 16V (AXP)	Gasolina	FWD	1390	55	75	01.00-05.02	*
1.4 16V (AXP)	Gasolina	FWD	1390	55	75	01.00-05.02	*
1.4 16V (BCA)	Gasolina	FWD	1390	55	75	01.00-05.02	*
1.4 16V (BCA)	Gasolina	FWD	1390	55	75	01.00-05.02	*
1.6 (AEH)	Gasolina	FWD	1595	74	100	10.98-07.04	*
1.6 (AEH)	Gasolina	FWD	1595	74	100	10.98-07.04	*
1.6 (AKL)	Gasolina	FWD	1595	74	100	10.98-07.04	*
1.6 (AKL)	Gasolina	FWD	1595	74	100	10.98-07.04	*
SKODA							

LISTA DE APLICACIONES - BUYERS GUIDE

FABIA (6Y2) 08.99-03.08							[CAMBIADO]:Fastback (Compact car-C Segment)
1.2 (AZQ)	Gasolina	FWD	1198	47	64	01.03-03.08	*
1.2 (AZQ)	Gasolina	FWD	1198	47	64	01.03-03.08	*
1.2 (BME)	Gasolina	FWD	1198	47	64	01.03-03.08	*
1.2 (BME)	Gasolina	FWD	1198	47	64	01.03-03.08	*
1.4 16V (AUB)	Gasolina	FWD	1390	74	100	12.99-03.08	*
1.4 16V (AUB)	Gasolina	FWD	1390	74	100	12.99-03.08	*
1.4 16V (BBZ)	Gasolina	FWD	1390	74	100	12.99-03.08	*
1.4 16V (BBZ)	Gasolina	FWD	1390	74	100	12.99-03.08	*
1.4 (AZE)	Gasolina	FWD	1397	44	60	08.00-08.02	*
1.4 (AZE)	Gasolina	FWD	1397	44	60	08.00-08.02	*
1.4 (AZF)	Gasolina	FWD	1397	44	60	08.00-08.02	*
1.4 (AZF)	Gasolina	FWD	1397	44	60	08.00-08.02	*
1.4 (AME)	Gasolina	FWD	1397	50	68	08.99-05.03	*
1.4 (AME)	Gasolina	FWD	1397	50	68	08.99-05.03	*
1.4 (AQW)	Gasolina	FWD	1397	50	68	08.99-05.03	*
1.4 (AQW)	Gasolina	FWD	1397	50	68	08.99-05.03	*
1.4 (ATZ)	Gasolina	FWD	1397	50	68	08.99-05.03	*
1.4 (ATZ)	Gasolina	FWD	1397	50	68	08.99-05.03	*
1.9 SDI (ASY)	Diesel	FWD	1896	47	64	12.99-03.08	*
1.9 SDI (ASY)	Diesel	FWD	1896	47	64	12.99-03.08	*
1.9 TDI (ATD)	Diesel	FWD	1896	74	100	01.00-03.08	*
1.9 TDI (ATD)	Diesel	FWD	1896	74	100	01.00-03.08	*
1.9 TDI (AXR)	Diesel	FWD	1896	74	100	01.00-03.08	*
1.9 TDI (AXR)	Diesel	FWD	1896	74	100	01.00-03.08	*
FABIA (6Y5) 01.00-12.07							**[CAMBIADO]:Furgón/Break (Compact car-C Segment)**
1.2 (AZQ)	Gasolina	FWD	1198	47	64	01.03-12.07	*
1.2 (AZQ)	Gasolina	FWD	1198	47	64	01.03-12.07	*
1.2 (BME)	Gasolina	FWD	1198	47	64	01.03-12.07	*
1.2 (BME)	Gasolina	FWD	1198	47	64	01.03-12.07	*
1.9 SDI (ASY)	Diesel	FWD	1896	47	64	07.01-12.07	*
1.9 SDI (ASY)	Diesel	FWD	1896	47	64	07.01-12.07	*
FABIA (6Y3) 10.99-12.07							**Sedán (Compact car-C Segment)**
1.2 (AZQ)	Gasolina	FWD	1198	47	64	01.03-12.07	*
1.2 (AZQ)	Gasolina	FWD	1198	47	64	01.03-12.07	*
1.2 (BME)	Gasolina	FWD	1198	47	64	01.03-12.07	*
1.2 (BME)	Gasolina	FWD	1198	47	64	01.03-12.07	*
1.4 16V (AUB)	Gasolina	FWD	1390	74	100	12.99-12.07	*
1.4 16V (AUB)	Gasolina	FWD	1390	74	100	12.99-12.07	*
1.4 16V (BBZ)	Gasolina	FWD	1390	74	100	12.99-12.07	*
1.4 16V (BBZ)	Gasolina	FWD	1390	74	100	12.99-12.07	*
1.4 (AZE)	Gasolina	FWD	1397	44	60	04.00-08.02	*
1.4 (AZE)	Gasolina	FWD	1397	44	60	04.00-08.02	*
1.4 (AZF)	Gasolina	FWD	1397	44	60	04.00-08.02	*
1.4 (AZF)	Gasolina	FWD	1397	44	60	04.00-08.02	*
1.4 (AME)	Gasolina	FWD	1397	50	68	07.01-05.03	*
1.4 (AME)	Gasolina	FWD	1397	50	68	07.01-05.03	*
1.4 (AQW)	Gasolina	FWD	1397	50	68	07.01-05.03	*
1.4 (AQW)	Gasolina	FWD	1397	50	68	07.01-05.03	*
1.4 (ATZ)	Gasolina	FWD	1397	50	68	07.01-05.03	*

1.4 (ATZ)	Gasolina	FWD	1397	50	68	07.01-05.03	*
1.9 SDI (ASY)	Diesel	FWD	1896	47	64	11.99-12.07	*
1.9 SDI (ASY)	Diesel	FWD	1896	47	64	11.99-12.07	*
1.9 TDI (ATD)	Diesel	FWD	1896	74	100	01.00-12.07	*
1.9 TDI (ATD)	Diesel	FWD	1896	74	100	01.00-12.07	*
1.9 TDI (AXR)	Diesel	FWD	1896	74	100	01.00-12.07	*
1.9 TDI (AXR)	Diesel	FWD	1896	74	100	01.00-12.07	*
FABIA II (542) 12.06-12.14				**[CAMBIADO]:Fastback (Compact car-C Segment)**			
1.2 (BBM)	Gasolina	FWD	1198	44	60	12.06-12.14	*
1.2 (BBM)	Gasolina	FWD	1198	44	60	12.06-12.14	*
1.2 (CHFA)	Gasolina	FWD	1198	44	60	12.06-12.14	*
1.2 (CHFA)	Gasolina	FWD	1198	44	60	12.06-12.14	*
1.2 (BZG)	Gasolina	FWD	1198	51	70	01.07-12.14	*
1.2 (BZG)	Gasolina	FWD	1198	51	70	01.07-12.14	*
1.2 (CEVA)	Gasolina	FWD	1198	51	70	01.07-12.14	*
1.2 (CEVA)	Gasolina	FWD	1198	51	70	01.07-12.14	*
1.2 (CGPA)	Gasolina	FWD	1198	51	70	01.07-12.14	*
1.2 (CGPA)	Gasolina	FWD	1198	51	70	01.07-12.14	*
1.2 (CHTA)	Gasolina	FWD	1198	51	70	01.07-12.14	*
1.2 (CHTA)	Gasolina	FWD	1198	51	70	01.07-12.14	*
1.2 12V	Gasolina	FWD	1198	55	75	10.10-12.14	*
1.2 12V	Gasolina	FWD	1198	55	75	10.10-12.14	*
1.4 TDI (BNM)	Diesel	FWD	1422	51	70	02.07-03.10	*
1.4 TDI (BNM)	Diesel	FWD	1422	51	70	02.07-03.10	*
FABIA II Combi (545) 10.07-12.14				**[CAMBIADO]:Break (Compact car-C Segment)**			
1.2 (BZG)	Gasolina	FWD	1198	51	70	10.07-12.14	*
1.2 (BZG)	Gasolina	FWD	1198	51	70	10.07-12.14	*
1.2 (CEVA)	Gasolina	FWD	1198	51	70	10.07-12.14	*
1.2 (CEVA)	Gasolina	FWD	1198	51	70	10.07-12.14	*
1.2 (CGPA)	Gasolina	FWD	1198	51	70	10.07-12.14	*
1.2 (CGPA)	Gasolina	FWD	1198	51	70	10.07-12.14	*
1.2 (CHTA)	Gasolina	FWD	1198	51	70	10.07-12.14	*
1.2 (CHTA)	Gasolina	FWD	1198	51	70	10.07-12.14	*
1.4 TDI (BNM)	Diesel	FWD	1422	51	70	10.07-03.10	*
1.4 TDI (BNM)	Diesel	FWD	1422	51	70	10.07-03.10	*
FABIA Combi (6Y5) 04.00-12.07				**[CAMBIADO]:Break (Compact car-C Segment)**			
1.2 (AZQ)	Gasolina	FWD	1198	47	64	01.03-12.07	*
1.2 (AZQ)	Gasolina	FWD	1198	47	64	01.03-12.07	*
1.2 (BME)	Gasolina	FWD	1198	47	64	01.03-12.07	*
1.2 (BME)	Gasolina	FWD	1198	47	64	01.03-12.07	*
1.4 16V (AUB)	Gasolina	FWD	1390	74	100	04.00-12.07	*
1.4 16V (AUB)	Gasolina	FWD	1390	74	100	04.00-12.07	*
1.4 16V (BBZ)	Gasolina	FWD	1390	74	100	04.00-12.07	*
1.4 16V (BBZ)	Gasolina	FWD	1390	74	100	04.00-12.07	*
1.4 (AZE)	Gasolina	FWD	1397	44	60	04.00-03.03	*
1.4 (AZE)	Gasolina	FWD	1397	44	60	04.00-03.03	*
1.4 (AZF)	Gasolina	FWD	1397	44	60	04.00-03.03	*
1.4 (AZF)	Gasolina	FWD	1397	44	60	04.00-03.03	*
1.4 (AME)	Gasolina	FWD	1397	50	68	04.00-05.03	*
1.4 (AME)	Gasolina	FWD	1397	50	68	04.00-05.03	*

1.4 (AQW)	Gasolina	FWD	1397	50	68	04.00-05.03	*
1.4 (AQW)	Gasolina	FWD	1397	50	68	04.00-05.03	*
1.4 (ATZ)	Gasolina	FWD	1397	50	68	04.00-05.03	*
1.4 (ATZ)	Gasolina	FWD	1397	50	68	04.00-05.03	*
1.9 SDI (ASY)	Diesel	FWD	1896	47	64	04.00-12.07	*
1.9 SDI (ASY)	Diesel	FWD	1896	47	64	04.00-12.07	*
1.9 TDI (ATD)	Diesel	FWD	1896	74	100	04.00-12.07	*
1.9 TDI (ATD)	Diesel	FWD	1896	74	100	04.00-12.07	*
1.9 TDI (AXR)	Diesel	FWD	1896	74	100	04.00-12.07	*
1.9 TDI (AXR)	Diesel	FWD	1896	74	100	04.00-12.07	*
OCTAVIA (1U2) 09.96-12.10				**[CAMBIADO]:Fastback (Compact car-C Segment)**			
1.9 SDI (AGP)	Diesel	FWD	1896	50	68	06.97-12.03	*
1.9 SDI (AGP)	Diesel	FWD	1896	50	68	06.97-12.03	*
1.9 SDI (AQM)	Diesel	FWD	1896	50	68	06.97-12.03	*
1.9 SDI (AQM)	Diesel	FWD	1896	50	68	06.97-12.03	*
1.9 TDI (AGR)	Diesel	FWD	1896	66	90	09.96-03.10	*
1.9 TDI (AGR)	Diesel	FWD	1896	66	90	09.96-03.10	*
1.9 TDI (ALH)	Diesel	FWD	1896	66	90	09.96-03.10	*
1.9 TDI (ALH)	Diesel	FWD	1896	66	90	09.96-03.10	*
OCTAVIA (1U5) 08.00-03.10				**[CAMBIADO]:Furgón/Break (Compact car-C Segment)**			
1.9 D (AQM)	Diesel	FWD	1896	50	68	08.00-12.03	*
1.9 D (AQM)	Diesel	FWD	1896	50	68	08.00-12.03	*
1.9 TDI (ALH)	Diesel	FWD	1896	66	90	08.00-03.10	*
1.9 TDI (ALH)	Diesel	FWD	1896	66	90	08.00-03.10	*
OCTAVIA Combi (1U5) 07.98-12.10				**[CAMBIADO]:Break (Compact car-C Segment)**			
1.9 SDI (AGP)	Diesel	FWD	1896	50	68	07.98-12.03	*
1.9 SDI (AGP)	Diesel	FWD	1896	50	68	07.98-12.03	*
1.9 SDI (AQM)	Diesel	FWD	1896	50	68	07.98-12.03	*
1.9 SDI (AQM)	Diesel	FWD	1896	50	68	07.98-12.03	*
1.9 TDI (AGR)	Diesel	FWD	1896	66	90	07.98-03.10	*
1.9 TDI (AGR)	Diesel	FWD	1896	66	90	07.98-03.10	*
1.9 TDI (ALH)	Diesel	FWD	1896	66	90	07.98-03.10	*
1.9 TDI (ALH)	Diesel	FWD	1896	66	90	07.98-03.10	*
1.9 TDI 4x4 (AGR)	Diesel	4WD	1896	66	90	11.99-02.06	*
1.9 TDI 4x4 (AGR)	Diesel	4WD	1896	66	90	11.99-02.06	*
ROOMSTER / PRAKTIK (5J) 03.07-05.15				**[CAMBIADO]:Furgón/Break (Large MPV-M1 Segment)**			
1.2 (BZG)	Gasolina	FWD	1198	51	70	03.07-05.15	*
1.2 (BZG)	Gasolina	FWD	1198	51	70	03.07-05.15	*
1.2 (CGPA)	Gasolina	FWD	1198	51	70	03.07-05.15	*
1.2 (CGPA)	Gasolina	FWD	1198	51	70	03.07-05.15	*
1.4 TDI (BNM)	Diesel	FWD	1422	51	70	03.07-03.10	*
1.4 TDI (BNM)	Diesel	FWD	1422	51	70	03.07-03.10	*
ROOMSTER / PRAKTIK (5J7) 03.06-05.15				**MPV (Large MPV-M1 Segment)**			
1.2 (BME)	Gasolina	FWD	1198	47	64	05.06-01.07	*
1.2 (BME)	Gasolina	FWD	1198	47	64	05.06-01.07	*
1.2 (BZG)	Gasolina	FWD	1198	51	70	01.07-05.15	*
1.2 (BZG)	Gasolina	FWD	1198	51	70	01.07-05.15	*
1.2 (CGPA)	Gasolina	FWD	1198	51	70	01.07-05.15	*
1.2 (CGPA)	Gasolina	FWD	1198	51	70	01.07-05.15	*

1.4 (BXW)	Gasolina	FWD	1390	63	86	09.06-05.15	*
1.4 (BXW)	Gasolina	FWD	1390	63	86	09.06-05.15	*
1.4 (CGGB)	Gasolina	FWD	1390	63	86	09.06-05.15	*
1.4 (CGGB)	Gasolina	FWD	1390	63	86	09.06-05.15	*
1.6 (BTS)	Gasolina	FWD	1598	77	105	09.06-05.15	*
1.6 (BTS)	Gasolina	FWD	1598	77	105	09.06-05.15	*
1.6 (CFNA)	Gasolina	FWD	1598	77	105	09.06-05.15	*
1.6 (CFNA)	Gasolina	FWD	1598	77	105	09.06-05.15	*
1.4 TDI (BNM)	Diesel	FWD	1422	51	70	07.06-03.10	*
1.4 TDI (BNM)	Diesel	FWD	1422	51	70	07.06-03.10	*
1.4 TDI (BMS)	Diesel	FWD	1422	59	80	09.06-03.10	*
1.4 TDI (BMS)	Diesel	FWD	1422	59	80	09.06-03.10	*
1.4 TDI (BNV)	Diesel	FWD	1422	59	80	09.06-03.10	*
1.4 TDI (BNV)	Diesel	FWD	1422	59	80	09.06-03.10	*
1.9 TDI (BLS)	Diesel	FWD	1896	77	105	09.06-03.10	*
1.9 TDI (BLS)	Diesel	FWD	1896	77	105	09.06-03.10	*
1.9 TDI (BSW)	Diesel	FWD	1896	77	105	09.06-03.10	*
1.9 TDI (BSW)	Diesel	FWD	1896	77	105	09.06-03.10	*
VW							
BORA / JETTA IV (1J2) 10.98-12.13				**Sedán (Compact car-C Segment)**			
1.6 (AEH)	Gasolina	FWD	1595	74	101	10.98-05.05	*
1.6 (AEH)	Gasolina	FWD	1595	74	101	10.98-05.05	*
1.6 (AKL)	Gasolina	FWD	1595	74	101	10.98-05.05	*
1.6 (AKL)	Gasolina	FWD	1595	74	101	10.98-05.05	*
1.6 (APF)	Gasolina	FWD	1595	74	101	10.98-05.05	*
1.6 (APF)	Gasolina	FWD	1595	74	101	10.98-05.05	*
FOX II (5Z1, 5Z3, 5Z4) 08.03-				**[CAMBIADO]:Fastback (City car-A Segment)**			
1.4 (BKR)	Gasolina	FWD	1390	55	75	04.05-12.09	*
1.4 (BKR)	Gasolina	FWD	1390	55	75	04.05-12.09	*
1.4 TDI (BNM)	Diesel	FWD	1422	51	70	04.05-12.09	*
1.4 TDI (BNM)	Diesel	FWD	1422	51	70	04.05-12.09	*
POLO IV (9N_, 9A_) 10.01-10.14				**[CAMBIADO]:Fastback (Supermini car-B Segment)**			
1.2 (AWY)	Gasolina	FWD	1198	40	54	01.02-05.07	*
1.2 (AWY)	Gasolina	FWD	1198	40	54	01.02-05.07	*
1.2 (BMD)	Gasolina	FWD	1198	40	54	01.02-05.07	*
1.2 (BMD)	Gasolina	FWD	1198	40	54	01.02-05.07	*
1.2 (BBM)	Gasolina	FWD	1198	44	60	05.07-11.09	*
1.2 (BBM)	Gasolina	FWD	1198	44	60	05.07-11.09	*
1.2 12V (AZQ)	Gasolina	FWD	1198	47	64	10.01-07.07	*
1.2 12V (AZQ)	Gasolina	FWD	1198	47	64	10.01-07.07	*
1.2 12V (BME)	Gasolina	FWD	1198	47	64	10.01-07.07	*
1.2 12V (BME)	Gasolina	FWD	1198	47	64	10.01-07.07	*
1.2 12V (BZG)	Gasolina	FWD	1198	51	69	05.07-11.09	*
1.2 12V (BZG)	Gasolina	FWD	1198	51	69	05.07-11.09	*
1.4 16V (AUA)	Gasolina	FWD	1390	55	75	10.01-05.08	*
1.4 16V (AUA)	Gasolina	FWD	1390	55	75	10.01-05.08	*
1.4 16V (BBY)	Gasolina	FWD	1390	55	75	10.01-05.08	*
1.4 16V (BBY)	Gasolina	FWD	1390	55	75	10.01-05.08	*
1.4 16V (BKY)	Gasolina	FWD	1390	55	75	10.01-05.08	*
1.4 16V (BKY)	Gasolina	FWD	1390	55	75	10.01-05.08	*

1.4 16V (BUD)	Gasolina	FWD	1390	59	80	05.06-11.09	*
1.4 16V (BUD)	Gasolina	FWD	1390	59	80	05.06-11.09	*
1.4 FSI (AXU)	Gasolina	FWD	1390	63	86	02.02-07.06	*
1.4 FSI (AXU)	Gasolina	FWD	1390	63	86	02.02-07.06	*
1.4 16V (AUB)	Gasolina	FWD	1390	74	101	10.01-05.08	*
1.4 16V (AUB)	Gasolina	FWD	1390	74	101	10.01-05.08	*
1.4 16V (BBZ)	Gasolina	FWD	1390	74	101	10.01-05.08	*
1.4 16V (BBZ)	Gasolina	FWD	1390	74	101	10.01-05.08	*
1.6 16V (BTS)	Gasolina	FWD	1598	77	105	05.06-11.09	*
1.6 16V (BTS)	Gasolina	FWD	1598	77	105	05.06-11.09	*
1.4 TDI (BNM)	Diesel	FWD	1422	51	70	04.05-11.09	*
1.4 TDI (BNM)	Diesel	FWD	1422	51	70	04.05-11.09	*
1.4 TDI (BWB)	Diesel	FWD	1422	51	70	04.05-11.09	*
1.4 TDI (BWB)	Diesel	FWD	1422	51	70	04.05-11.09	*
1.4 TDI (AMF)	Diesel	FWD	1422	55	75	10.01-06.05	*
1.4 TDI (AMF)	Diesel	FWD	1422	55	75	10.01-06.05	*
1.4 TDI (BAY)	Diesel	FWD	1422	55	75	10.01-06.05	*
1.4 TDI (BAY)	Diesel	FWD	1422	55	75	10.01-06.05	*
1.4 TDI (BMS)	Diesel	FWD	1422	59	80	04.05-11.09	*
1.4 TDI (BMS)	Diesel	FWD	1422	59	80	04.05-11.09	*
1.4 TDI (BNV)	Diesel	FWD	1422	59	80	04.05-11.09	*
1.4 TDI (BNV)	Diesel	FWD	1422	59	80	04.05-11.09	*
1.9 SDI (ASY)	Diesel	FWD	1896	47	64	10.01-11.09	*
1.9 SDI (ASY)	Diesel	FWD	1896	47	64	10.01-11.09	*
1.9 TDI (ATD)	Diesel	FWD	1896	74	101	10.01-11.09	*
1.9 TDI (ATD)	Diesel	FWD	1896	74	101	10.01-11.09	*
1.9 TDI (AXR)	Diesel	FWD	1896	74	101	10.01-11.09	*
1.9 TDI (AXR)	Diesel	FWD	1896	74	101	10.01-11.09	*
1.9 TDI (BMT)	Diesel	FWD	1896	74	101	10.01-11.09	*
1.9 TDI (BMT)	Diesel	FWD	1896	74	101	10.01-11.09	*
POLO V (6R1, 6C1) 03.09-				**[CAMBIADO]:Fastback (Supermini car-B Segment)**			
1.0 (CHYA)	Gasolina	FWD	999	44	60	01.14-10.17	*
1.0 (CHYA)	Gasolina	FWD	999	44	60	01.14-10.17	*
1.0 (CHYB)	Gasolina	FWD	999	55	75	01.14-10.17	*
1.0 (CHYB)	Gasolina	FWD	999	55	75	01.14-10.17	*
1.0 TSI (CHZB)	Gasolina	FWD	999	70	95	11.14-10.17	*
1.0 TSI (CHZB)	Gasolina	FWD	999	70	95	11.14-10.17	*
1.0 TSI (CHZC)	Gasolina	FWD	999	81	110	11.14-10.17	*
1.0 TSI (CHZC)	Gasolina	FWD	999	81	110	11.14-10.17	*
1.2 TSI	Gasolina	FWD	1197	63	86	06.09-	*
1.2 TSI	Gasolina	FWD	1197	63	86	06.09-	*
1.2 TSI (CBZC)	Gasolina	FWD	1197	66	90	05.11-05.14	*
1.2 TSI (CBZC)	Gasolina	FWD	1197	66	90	05.11-05.14	*
1.2 TSI (CBZB)	Gasolina	FWD	1197	77	105	11.09-05.22	*
1.2 TSI (CBZB)	Gasolina	FWD	1197	77	105	11.09-05.22	*
1.2 TSI (CJZD)	Gasolina	FWD	1197	81	110	01.14-10.17	*
1.2 TSI (CJZD)	Gasolina	FWD	1197	81	110	01.14-10.17	*
1.2 (CGPB)	Gasolina	FWD	1198	44	60	06.09-05.14	*
1.2 (CGPB)	Gasolina	FWD	1198	44	60	06.09-05.14	*
1.2 (CGPA)	Gasolina	FWD	1198	51	70	06.09-05.14	*
1.2 (CGPA)	Gasolina	FWD	1198	51	70	06.09-05.14	*

1.2	Gasolina	FWD	1198	55	75	08.11-02.18	*
1.2	Gasolina	FWD	1198	55	75	08.11-02.18	*
1.4 (6R1) (CDDA)	Gasolina	FWD	1390	63	85	03.09-05.14	*
1.4 (6R1) (CDDA)	Gasolina	FWD	1390	63	85	03.09-05.14	*
1.4 (6R1) (CGGB)	Gasolina	FWD	1390	63	85	03.09-05.14	*
1.4 (6R1) (CGGB)	Gasolina	FWD	1390	63	85	03.09-05.14	*
1.4 (6R1) (CLPA)	Gasolina	FWD	1390	63	85	03.09-05.14	*
1.4 (6R1) (CLPA)	Gasolina	FWD	1390	63	85	03.09-05.14	*
1.6	Gasolina	FWD	1598	63	86	05.10-	*
1.6	Gasolina	FWD	1598	63	86	05.10-	*
1.6 (CWVB)	Gasolina	FWD	1598	66	90	07.14-10.17	*
1.6 (CWVB)	Gasolina	FWD	1598	66	90	07.14-10.17	*
1.6 (CWVA)	Gasolina	FWD	1598	81	110	07.14-10.17	*
1.6 (CWVA)	Gasolina	FWD	1598	81	110	07.14-10.17	*
1.8 GTI	Gasolina	FWD	1798	136	185	11.14-	*
1.8 GTI	Gasolina	FWD	1798	136	185	11.14-	*
1.8 GTI (DAJA)	Gasolina	FWD	1798	141	192	11.14-10.17	*
1.8 GTI (DAJA)	Gasolina	FWD	1798	141	192	11.14-10.17	*
1.8 GTI (DAJB)	Gasolina	FWD	1798	141	192	11.14-10.17	*
1.8 GTI (DAJB)	Gasolina	FWD	1798	141	192	11.14-10.17	*
1.8 GTI 230 (DAJA)	Gasolina	FWD	1798	169	230	04.16-10.17	*
1.8 GTI 230 (DAJA)	Gasolina	FWD	1798	169	230	04.16-10.17	*
1.4 BiFuel (CMAA)	Gasol./Gas (LPG)	FWD	1390	60	82	03.10-01.11	*
1.4 BiFuel (CMAA)	Gasol./Gas (LPG)	FWD	1390	60	82	03.10-01.11	*
1.6 BiFuel (CNKA)	Gasol./Gas (LPG)	FWD	1598	60	82	01.11-05.14	*
1.6 BiFuel (CNKA)	Gasol./Gas (LPG)	FWD	1598	60	82	01.11-05.14	*
1.2 TDI (CFWA)	Diesel	FWD	1199	55	75	10.09-05.14	*
1.2 TDI (CFWA)	Diesel	FWD	1199	55	75	10.09-05.14	*
1.4 TDI (CUSA)	Diesel	FWD	1422	55	75	03.14-10.17	*
1.4 TDI (CUSA)	Diesel	FWD	1422	55	75	03.14-10.17	*
1.4 TDI (CYZB)	Diesel	FWD	1422	55	75	03.14-10.17	*
1.4 TDI (CYZB)	Diesel	FWD	1422	55	75	03.14-10.17	*
1.4 TDI (CUSB)	Diesel	FWD	1422	66	90	02.14-10.17	*
1.4 TDI (CUSB)	Diesel	FWD	1422	66	90	02.14-10.17	*
1.4 TDI (CUTA)	Diesel	FWD	1422	77	105	05.14-10.17	*
1.4 TDI (CUTA)	Diesel	FWD	1422	77	105	05.14-10.17	*
1.4 TDI (CYZA)	Diesel	FWD	1422	77	105	05.14-10.17	*
1.4 TDI (CYZA)	Diesel	FWD	1422	77	105	05.14-10.17	*
1.5 TDI	Diesel	RWD	1498	66	90	07.14-	*
1.5 TDI	Diesel	RWD	1498	66	90	07.14-	*
1.6 TDI (CAYA)	Diesel	FWD	1598	55	75	06.09-05.14	*
1.6 TDI (CAYA)	Diesel	FWD	1598	55	75	06.09-05.14	*
1.6 TDI (CAYB)	Diesel	FWD	1598	66	90	06.09-05.14	*
1.6 TDI (CAYB)	Diesel	FWD	1598	66	90	06.09-05.14	*
POLO V (6R1, 6C1) 03.09-				**Furgón/hatchback (Supermini car-B Segment)**			
1.0 (CHYA)	Gasolina	FWD	999	44	60	01.14-10.17	*
1.0 (CHYA)	Gasolina	FWD	999	44	60	01.14-10.17	*
1.0 (CHYB)	Gasolina	FWD	999	55	75	01.14-10.17	*
1.0 (CHYB)	Gasolina	FWD	999	55	75	01.14-10.17	*

1.0 TSI (CHZB)	Gasolina	FWD	999	70	95	11.14-10.17	*
1.0 TSI (CHZB)	Gasolina	FWD	999	70	95	11.14-10.17	*
1.2 TSI (CJZC)	Gasolina	FWD	1197	66	90	02.14-10.17	*
1.2 TSI (CJZC)	Gasolina	FWD	1197	66	90	02.14-10.17	*
1.2 TSI (CJZD)	Gasolina	FWD	1197	81	110	01.14-10.17	*
1.2 TSI (CJZD)	Gasolina	FWD	1197	81	110	01.14-10.17	*
1.4 TDI (CUSA)	Diesel	FWD	1422	55	75	03.14-10.17	*
1.4 TDI (CUSA)	Diesel	FWD	1422	55	75	03.14-10.17	*
1.4 TDI (CYZB)	Diesel	FWD	1422	55	75	03.14-10.17	*
1.4 TDI (CYZB)	Diesel	FWD	1422	55	75	03.14-10.17	*
1.4 TDI (CUSB)	Diesel	FWD	1422	66	90	02.14-10.17	*
1.4 TDI (CUSB)	Diesel	FWD	1422	66	90	02.14-10.17	*
POLO V VIVO (6S1, 6S3) 02.10-				**[CAMBIADO]:Fastback (Supermini car-B Segment)**			
1.4	Gasolina	FWD	1390	55	75	03.10-03.19	*
1.4	Gasolina	FWD	1390	55	75	03.10-03.19	*